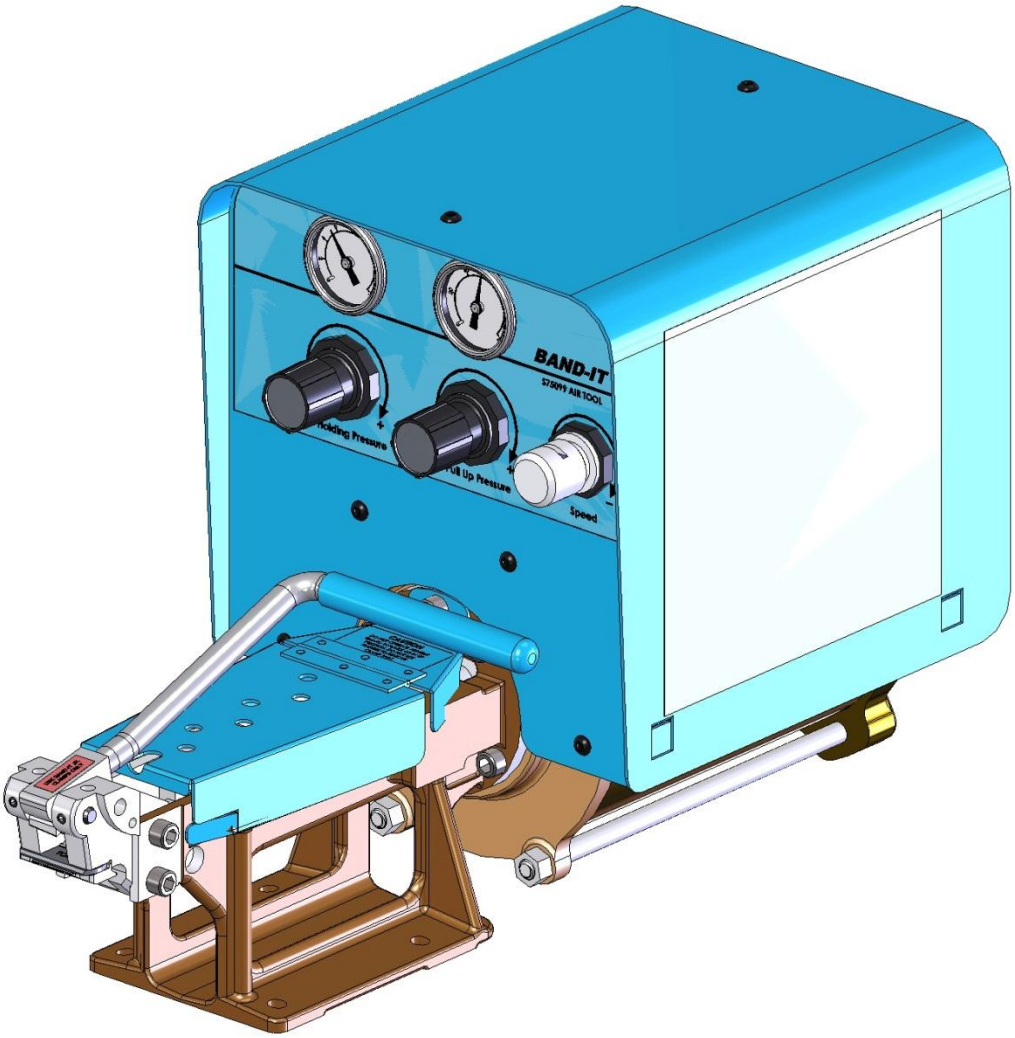

UES Promura
10-12 McWilliam Street
Springvale VIC 3171, Australia
+61 3 9547 5833
sales@uespromura.com.au

www.uespromura.com.au

Document# P36687 Rev. I

© Copyright
BAND-IT-IDEX, Inc. 2013
All rights reserved

UES Promura | +61 3 9547 5833 | sales@uespromura.com.au
10-12 McWilliam Street, Springvale VIC 3171 | uespromura.com.au
Distributor reference copy. Technical / issuer particulars retained; contact links localised.

Page Information

Page	Information
2	Table of Contents
3	Warranty and Safety Guidelines
4	Tool Performance and Overview
5	Air System Requirements
6	Tool Installation and Precautions
7-8	Setting Controls and Tool Operation
9	Trouble Shooting Guide
10	Preventative Maintenance
11-16	Replacement Service Parts Identification
17	Installing Clamps
18-19	Replacement Service Parts
20	Optional Reference Gauge
21	Factory Services

UES Promura
10-12 McWilliam Street
Springvale VIC 3171, Australia
+61 3 9547 5833
sales@uespromura.com.au

© Copyright
BAND-IT-IDEX, Inc. 2013
All rights reserved

UES Promura | +61 3 9547 5833 | sales@uespromura.com.au
10-12 McWilliam Street, Springvale VIC 3171 | uespromura.com.au
Distributor reference copy. Technical / issuer particulars retained; contact links localised.

For Warranty information visit the following URL

uespromura.com.au/document-support/

Use of the S75099 without proper filtration and lubrication will void the warranty. See section on air system requirements for details.

Safety Guidelines:

- Read this manual and become familiar with the tool before installing any clamps.
- Protective eyewear should be worn when connecting and disconnecting the tool to compressed air sources and during operation.
- Wear appropriate gloves for handling steel while operating this tool, applying steel clamps and removing the scrap clamp tail.
- Tool should be firmly mounted to an adequate support surface.
- Clamp tensioning or clamp tail retrieval can be immediately stopped by releasing pressure from the foot pedal.
- When applying clamps, care should be taken to insure fingers and loose clothing are not in contact with the clamp being applied.
- Never attempt to clamp objects which have the potential to burst, shatter or otherwise cause bodily harm.
- Disconnect air supply prior to maintenance and disassembly of tool components.
- Liquids such as soaps and solvents should never be put directly into the airlines or allowed to circulate through the tool.
- Additional Safety messages are included as part of the tool operation and clamp installation sections.

UES Promura
10-12 McWilliam Street
Springvale VIC 3171, Australia
+61 3 9547 5833
sales@uespromura.com.au

© Copyright
BAND-IT-IDEX, Inc. 2013
All rights reserved

- The S75099 has been designed to tension, set the Junior style lock and cut-off the remaining scrap clamp tail of Junior Smooth I.D. and standard Junior preformed clamps. BAND-IT manufactures Junior style clamps using galvanized carbon steel, Type 201 Stainless Steel and Type 316 Stainless Steel. Clamp widths are available from ¼" to ¾" wide and available diameter clamps range from 13/16" to as large as 8". All clamps can be easily installed on hose assemblies or objects chosen by the operator using the BAND-IT S75099 air tool.

- During the operator controlled cycle, the S75099 Air Tool will tension the clamp around the object by pulling the band through the buckle until the desired tension is achieved. If the cycle is allowed to continue, the tool will release an amount of tension pressure automatically, switching to a lower holding pressure. This pressure drop is in preparation for manually setting the lock and shearing the excess clamp tail by operating the cut-off handle*. The completion of each clamp includes setting the lock while simultaneously cutting off the excess, scrap clamp tail. The finished lock should be even with the height of the buckle thickness, have a smooth edge with no sharp burrs while maintaining the low profile of the Junior style buckle.

  ***Important operational note!** The S75099 tool directs compressed air through a foot pedal control to cycle the tool and complete the installation of BAND-IT Junior style clamps. The foot pedal has a dual action, forward (toe) and reverse (heel). During normal operation, the operator should fully depress the foot pedal forward (toe), <u>not removing this pedal pressure until the cycle has completed, including the assembly roll up and clamp tail cut-off.</u> Upon completion of the lock, the heel of the foot pedal should then be depressed causing the clamp tail to be positioned in the band slot, ready for removal from the tool by the operator.

- **Operating tip**: Operation can be stopped at any time by removing the operators foot completely from the foot pedal control, however, this will affect the tension applied to the clamp. If cycle is ended prematurely, prior to hose assembly roll-up, depress the heel side of the foot pedal to remove the hose assembly from the tool or momentarily allow the air system to stabilize and resume the clamping cycle by pressing the foot pedal control forward. If the roll-up cycle has already been initiated, re-tensioning the clamp will result in the tail being overstressed and breaking prematurely before the lock can be formed.

UES Promura
10-12 McWilliam Street
Springvale VIC 3171, Australia
+61 3 9547 5833
sales@uespromura.com.au

© Copyright
BAND-IT-IDEX, Inc. 2013
All rights reserved

Important: For proper tool performance, air requirements for S75099 should be:

Line Pressure – 100 psi minimum,125 psi maximum (689 – 862 kPa)

Volume - should be 3-5 CFM

Air Delivery system - ¼" minimum diameter airline with a ¼" N.P.T. connection.

Filtration – Follow typical filtration requirements of air operated equipment. Standard filtering systems should be located no further than 30' from this tool in addition to the supplemental system supplied at the back of the tool as shown below. This BAND-IT supplied system includes a filter and lubricator. Lubricator should be refilled with DTE 24 hydraulic oil. The oil drip-rate can be verified by repeated full cycling the tool. One drop should fall in the sight glass within 10-25 cycles. Excess oil will not benefit tool life and may lead to blockage of air mufflers and a dirty environment.

Serial # decal location

View of the back side of the S75099 showing the supplemental filtering and lubrication system as well as the ¼" N.P.T. air connection with typical quick connect coupling.

Warning: The lubricator should be refilled with DTE 24 hydraulic oil only. The use of other oils may cause damage to the system.

UES Promura
10-12 McWilliam Street
Springvale VIC 3171, Australia
+61 3 9547 5833
sales@uespromura.com.au

www.uespromura.com.au

© Copyright
BAND-IT-IDEX, Inc. 2013
All rights reserved

UES Promura | +61 3 9547 5833 | sales@uespromura.com.au
10-12 McWilliam Street, Springvale VIC 3171 | uespromura.com.au
Distributor reference copy. Technical / issuer particulars retained; contact links localised.

Tool Installation

1) Recommended work bench height is 34” – 40”. This height is suggested as the optimum range for operator comfort and safety during typical clamp applications. Locate and securely mount the tool on a solid surface making sure of ample clearance on both left and right sides for handling hose assemblies of various lengths.

2) The air tool should be firmly secured as close to the front edge of the work station as possible using the angled mounting brackets supplied with the tool. This position will reduce interference of hose assemblies during clamp application. Mount the tool using 5/16” diameter fastening hardware (not supplied with tool). Check hardware for tightness regularly.

3) Hardware may loosen during shipment. Loose fastening hardware will adversely affect tool operation, specifically the cut off operation. All fasteners securing the tool cover, pneumatics, head assembly, blade assembly, cut-off handle and mounting hardware should be checked for tightness regularly and re-tensioned as needed.

4) Use of the S75099 without properly maintained filtration and lubrication will cause clamp tensioning problems and void the warranty.

Clamp Installation: Precautions

Operators should understand that a tighter clamp keeps the fitting more secure, but excess tension could damage the hose assembly. The fitting stem must have prominent barbs for proper retention inside the hose, but barbs must not be sharp to prevent cutting into the hose. Hose, fitting and clamp must be compatible with each other and the intended working environment. If in doubt, consult the hose or fitting manufacturer or call BAND-IT.

Clamping objects other than hose require similar precautions.

CAUTION: Improperly tightened clamps may result in dangerous hose assemblies, which could cause injuries or property damage.

CAUTION: Abuse or use of hose outside the manufacturers recommended conditions may cause it to quickly deteriorate and become a safety hazard. This could result in serious injury or property damage. Inspect and test hose assemblies frequently. Repair or replace at the slightest sign of damage or deterioration.

UES Promura
10-12 McWilliam Street
Springvale VIC 3171, Australia
+61 3 9547 5833
sales@uespromura.com.au

© Copyright
BAND-IT-IDEX, Inc. 2013
All rights reserved

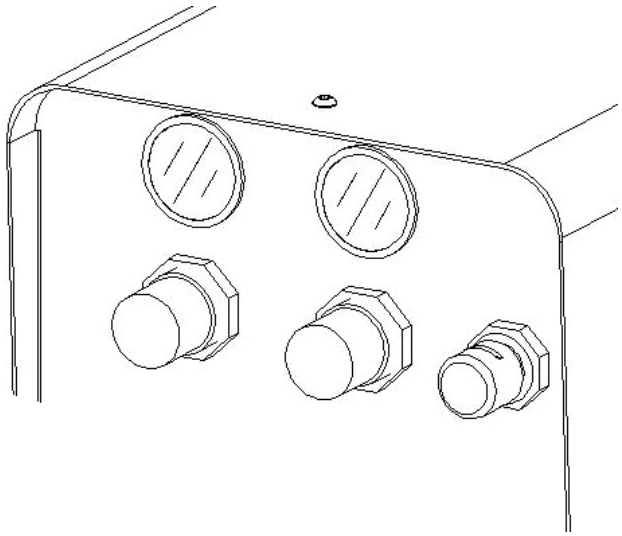

Air pressure setting can be made using the regulators and gauges on face of the tool.

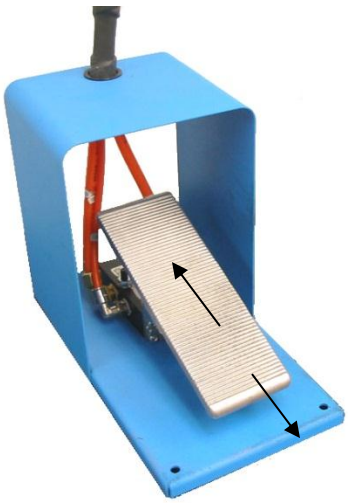

Dual function foot control valve. Pressing forward activates clamp installation. Heel action activates tail return and prepares for next clamp.

Rule: **Always approach the pull-up pressure setting from below and the holding pressure setting from above the recommended value.**

Rule: **Gauge readings are to be used as a guide. It may be necessary to adjust the Pull-Up and Holding Pressure settings to match the requirements of the particular hose assembly construction or application.**

1. Speed Control adjusts the speed of piston travel during tensioning of the band clamp. A slower setting will allow more time while a faster setting may cause increased friction between the band and the buckle as the clamp tail is pulled through the buckle during tensioning. Increased friction may cause the clamp to tension improperly.

2. Setting the Speed Control: The speed of the cycle should be set according to the width of Junior Clamp being tensioned. Each width clamp has a color code setting on the speed control regulator. See this manual page # 8 or the decal on the side of the tool. Use the attached lock ring to secure the desired setting and prevent accidental changes.

3. Pull-up Pressure reflects the tension applied to the clamp and is measured by force applied to the clamp tail being pulled through the buckle. A pull-up pressure setting too low may allow the fitting to be forced out of the hose assembly. A setting too high may cause damage to the assembly or cause the clamp tail to tear. For most hose applications, the ideal setting is as high as can be achieved without sacrificing the strength of the lock, damaging the hose and fitting or breaking the clamp tail.

UES Promura
10-12 McWilliam Street
Springvale VIC 3171, Australia
+61 3 9547 5833
sales@uespromura.com.au

© Copyright
BAND-IT-IDEX, Inc. 2013
All rights reserved

4. Setting Pull-up Pressure: Pull the identified regulator knob and turn clockwise to reach pull-up pressure. Approach pressure setting from below by increasing pressure. Many factors should be considered when choosing the correct operating setting for the tool. The fitting design as well as the type, thickness and durometer of the hose material must be considered when setting the correct pressures for your assembly.

5. Holding Pressure reflects a lower pressure designed to allow the hose assembly to be rolled up in preparation for setting the lock with the shearing or cutting action on the clamp tail. A setting too low will cause difficulty in shearing the clamp tail and leaving an excessive burr on the buckle at the point of lock. A setting too high may cause the clamp tail to “pop” free of the band gripper, cause the lock to slip back under the buckle or cause a sudden jolt to the S75099 tool.

6. Setting Holding Pressure: Cycle the tool, holding the foot pedal in the toe forward position. The tool will reach pull-up tension and kick down to a holding pressure. Read the gauge and repeat the cycle turning the holding regulator clockwise to raise pressure or counter clockwise to lower pressure. Allow the tool to settle after each cycle before reading the value on the gauge.

7. Check pressure setting by cycling tool until hold pressure gauge stops.

8. Reset tool by depressing heel end of foot pedal. Remove foot.

9. Repeat steps 2, 4, 6, and 7. At pressure kick down, verify all settings and adjust if necessary. Lock settings in place.

Rule: Allow air to completely exhaust between each stage of the tools cycle. Failure to let air completely exhaust may result in clamps not pulling up tight.

	Guide for Operating Pressures for the S75099 Air tool								
Clamp Width	201 Stainless Steel			316 Stainless Steel			Galvanized Carbon Steel		
Inch	Pull Up Pressure (PSI)	Holding Pressure (PSI)	Speed Control Setting	Pull Up Pressure (PSI)	Holding Pressure (PSI)	Speed Control Setting	Pull Up Pressure (PSI)	Holding Pressure (PSI)	Speed Control Setting
1/4" (6.4mm)	15	4	Blue	15	4	Blue	NA	NA	NA
3/8" (7.5mm)	25	5	White	20	5	White	25	6	Blue
1/2" (12.7mm)	40	6	White	35	6	White	40	7	White
5/8" (15.9mm)	50	7	Red	40	7	Red	50	8	White
3/4" (19.1mm)	60	8	Red	50	8	Red	60	9	Red

UES Promura
10-12 McWilliam Street
Springvale VIC 3171, Australia
+61 3 9547 5833
sales@uespromura.com.au

© Copyright
BAND-IT-IDEX, Inc. 2013
All rights reserved

UES Promura | +61 3 9547 5833 | sales@uespromura.com.au
10-12 McWilliam Street, Springvale VIC 3171 | uespromura.com.au
Distributor reference copy. Technical / issuer particulars retained; contact links localised.

Problem	Probable Cause	Correction
Sharp or scarred edges on clamp. Metal deposits on underside of tail at buckle edge.	Loose or broken cutter blade / backing plate. Sharp edge on cutter blade due to wear	Remove and examine the cutterblade kit for chips, cracks, excessive wear or material build-up. Lightly hone with a medium grit India stone to polish the leading surfaces. Always replace components as a kit, not individually. Fully tighten included hardware.
Tail is broken at approximately 45°. Clamp material stretched or thinned at break.	Pull-up pressure exceeds the strength of the band clamp.	Reduce pull-up pressure to the suggested range. Adjust lower if necessary.
Clamp pulls in a jerky manner.	Clamp not inserted properly.	Insert clamp straight and level.
	Pull-up cylinder needs lubrication	Check filter / lubricator, fill to proper level.
	Loose or worn cutter blade kit on head	Check and tighten all hardware.
Clamp tail slips in band gripper lever.	Teeth on band gripper lever are chipped, filled with metal build up or have excessive wear	Remove and examine band gripper lever. Clean or replace as necessary.
	Pressure settings too high	Settings are a guide, it may be necessary to lower pressure settings.
	Gripper spring stretched out	Replace spring. Always replace gripper lever and spring as a set.
	Tripper plate stuck or broken	Examine, clean and lube the tripper plate.
Clamp tail catches as heel of foot pedal is depressed and cylinder is returned for next clamp cycle.	Clamp tension or pull up pressure is set low and has not yielded the band. This may be necessary depending upon the type of hose construction.	1) Re-cycle tool 2) Cycle tool keeping foot control toe end depressed. 3) To remove clamp tail, reach under piston rod and locate band gripper lever. 4) Pull lever forward, reaching under with pliers to grasp tail and carefully remove tail. (Never position fingers anywhere but on gripper lever, keep foot control valve depressed forward while working in this area).
Tool doesn't cut-off clamp.	Loose or broken cutter blade	Tighten or replace cutter blade.
	Low pressure on incoming air supply	Check and adjust incoming air supply. Note: Minimum supply pressure is 75 PSI.
Tool takes excessive time for clamp pull-up.	Air leaks from loose connection or worn parts	Remove tool cover. Examine all air connections, tighten loose connections and / or replace worn parts.
	Speed Control regulator set tool low	Adjust setting per instructions in this manual or side panels decal.
Clamp tail cannot be inserted into tool.	Previous clamp tail has not been	Remove clamp tail from tool
	Tripper plate may be broken or binding.	Remove, inspect, clean and lubricate or replace tripper plate.

UES Promura
10-12 McWilliam Street
Springvale VIC 3171, Australia
+61 3 9547 5833
sales@uespromura.com.au

© Copyright
BAND-IT-IDEX, Inc. 2013
All rights reserved

1. For proper functioning of the S75099 air tool, a filter / lubricator must be used on the air supply within 30 feet of the air tool. The warranty is voided if a filter / lubricator is not used.
2. Before using air tool, check to see that the blade and backing plate are fully tensioned.
3. Clean gripper occasionally. Metal particles and dirt on the gripper lever can cause it to slip off the clamp tail. To remove gripper lever, loosen set screw in the head assembly from underneath the block and tap out pin.

Maintenance Checklist

Component	Check	Action	Frequency
Clamp Head	Check for loose mounting screws	Tighten all screws and fasteners	Daily
Shear hook	Check working edge for wear or damage	replace if necessary (J00587).	Daily
Cutter Blade and Backing Plate	Check to see if blade is loose or has any broken or chipped edges	Tighten all screws and fasteners. Replace if necessary (J93099).	Daily
Filter / Lubricator	Check for build-up of dirt, etc. Check for low, contaminated or discolored lubricant	Drain and clean with soap and water. Refill with hydraulic oil DTE 24. Set drip rate to 1 drop each 10-25 cycles. Order more lubricant if necessary (S31589).	Every 2,000 clamps
Gripper Lever	Check for build-up of dirt, etc., in teeth and check spring for tension.	Remove and clean with small pointed object - knife blade, etc. Replace as necessary with new gripper and new spring as a kit (S45799).	Every 2,000 clamps
Cylinder	Check for build-up of dirt, contaminants externally on piston rod seals	Clean with soap and warm water	6 Months
Tripper Plate	Check for cracks, build-up of dirt, contaminants	Clean and apply a light coating of moly grease or equivalent	6 Months
Air Exhaust Mufflers	Check for build-up of dirt, contaminants, etc.	Remove and clean with non-flammable degreaser	6 Months
	Check for tight connection	Tension as necessary	6 Months

UES Promura
10-12 McWilliam Street
Springvale VIC 3171, Australia
+61 3 9547 5833
sales@uespromura.com.au

© Copyright
BAND-IT-IDEX, Inc. 2013
All rights reserved

Production tools will experience wear of specific parts. Preventative Maintenance, including regular cleaning, lubrication and checking all fasteners for tension will reduce the replacement frequency of these parts.

1) S45799 Gripper kit – Always replace all components as a kit including the spring.
2) J93099 Cutter Blade, Backing Plate Kit – Always replace all components as a kit including new bolts.
3) J00587 Shear Hook
4) S45087 Clamp Tail Tripper Plate

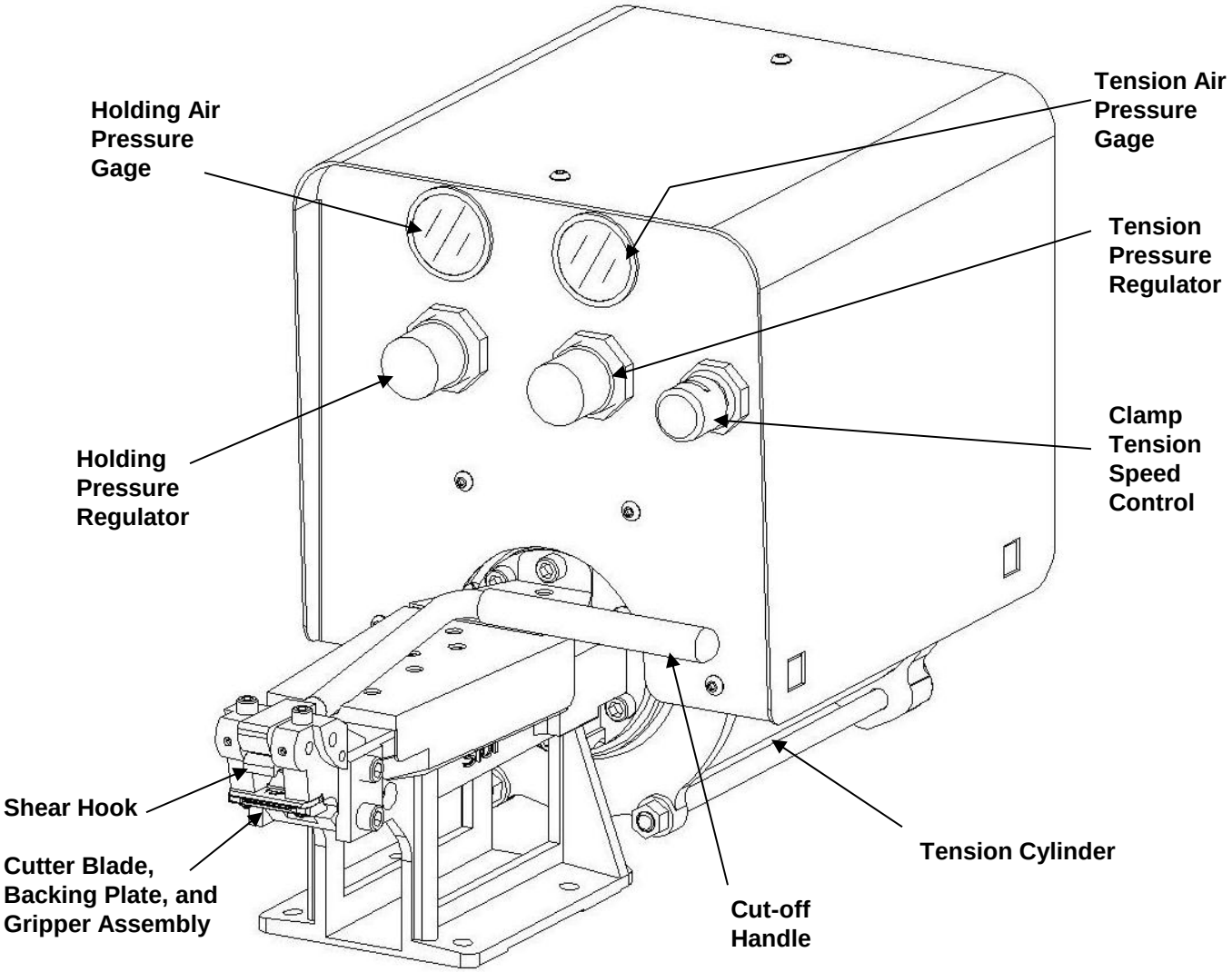

UES Promura
10-12 McWilliam Street
Springvale VIC 3171, Australia
+61 3 9547 5833
sales@uespromura.com.au

www.uespromura.com.au

Document# P36687 Rev. I
© Copyright
BAND-IT-IDEX, Inc. 2013
All rights reserved

UES Promura | +61 3 9547 5833 | sales@uespromura.com.au
10-12 McWilliam Street, Springvale VIC 3171 | uespromura.com.au
Distributor reference copy. Technical / issuer particulars retained; contact links localised.

ITEM NO.	PART NO.	QTY	DESCRIPTION	ITEM NO.	PART NO.	QTY	DESCRIPTION
1	C00387	0.15	LOCKING COMPOUND, HIGH STRENGTH (CC)	54	S42387	1	PLUG, CAP, 1/4 NPT
2	G00689	1	SWIVEL UNION, M X F	55	S44687	1	PISTON, CYLINDER
3	G92188	4	NUT, HEX, 5/16-18	56	S44887	1	SPACER, .205 X .504
4	J60767	1	TUBE, CYLINDER	57	S44987	1	BOLT, HEX, 1/2-13 X 2.5L
5	J61967	1	PLATE, ROD GUIDE	58	S45087	1	PLATE, BAND GRIPPER
6	J62187	6	CYLINDER BOLT	59	S45186	1	GRIPPER, BAND, FINISHED, REX
7	J63187	1	O-RING, .734 ID X .139	60	S45389	1	PISTON ROD ASSEMBLY
8	J63287	1	O-RING, 5.437 ID X .295	61	S45587	1	O-RING, .487 ID X .103
9	J64887	1	SCREW, SET, #10-32 X .188 L	62	S45687	1	WASHER, 17/32 X 1-1/16
10	J66587	4	LOCK WASHER, 5/16 ID	63	S45799	1	KIT, GRIPPER/SPRING
11	J66687	2	GASKET, CYLINDER	64	S45888	1	SLIDE COVER ASSEMBLY
12	J67687	8	NUT, HEX, 3/8-24	65	S46088	1	PANEL, FRONT, S750
13	J68587	4	SCREW, CAP, #8-32 X .38 L	66	S46188	1	PANEL, REAR
14	J90887	1	PIN, SHEAR HOOK PIVOT	67	S46288	1	PANEL, TOP COVER
15	J90987	14	SCREW, CAP, 5/16-18 X .88 L	68	S46587	3	HEX, #10-32 X 3/8-24 X 3/4" L
16	J93099	1	KIT, CUTTER BLADE	69	S46687	1	HEX, #10-32 X 3/8-24 X 5/8" L
17	P00187	1	LABEL, BLANK 1-7/8" X 3-1/2"	70	S46787	1	ADAPTER, BULKHEAD
18	P06386	1	LABEL, FRONT, S750	71	S46888	1	GUARD, FOOT VALVE
19	P06486	1	DECAL, BAND-IT, LARGE	72	S46987	2	BASE, INCLINED
20	P06586	1	DECAL, PRESSURE, S750	73	S47087	1	VALVE, FLOW CONTROL
21	P36687	1	MANUAL,OPERATION S750 AIR TOOL	74	S47287	1	VALVE, 4-WAY, ASSY
22	P70287	1	BAG, PLASTIC 4"X6"X.004	75	S47387	1	VALVE, FOOT
23	P70587	1	BAG, PLASTIC 10"X18"X.004	76	S47487	1	REGULATOR, PULL UP
24	R00608	8.5	TUBING, NYLON 1/4 OD X .180 ID (FT)	77	S47587	1	REGULATOR, HOLDING
25	R00631	4	BUMPER, SELF ADHESIVE	78	S47687	1	GAUGE, PRESS, 0-100, 1/8 NPT
26	S10086	1	LINER, SHIPPING CARTON	79	S47787	1	GAUGE, HOLDING
27	S10087	1	PLYWOOD, BASE, AIR TOOL	80	S47988	1	COVER, CYLINDER, REAR
28	S10088	1	SHIPPING CARTON, AIR TOOL	81	S48187	1	NUT, HEX, 3/4-16
29	S11589	1	HANDLE ASSY, JR. HEAD	82	S48387	1	ELBOW, 90 DEG, STREET
30	S11787	3	MUFFLER, AIR EXHAUST, 1/4 NPT	83	S48487	1	BUSHING, REDUCER
31	S15587	1	PLUG, NYLON, 1/4	84	S48687	3	FITTING, Q-R, STRAIGHT, 1/4 X 1/4NPT
32	S18059	1	HEAD, JUNIOR CLAMP, ASSEMBLY	85	S48787	7	ELBOW, MALE, 90 DEG
33	S21587	1	PIN, GRIPPER PIVOT	86	S48887	2	CONNECTOR, 1/8 NPTF X 1/4 OD TUBE
34	S21789	1	TOOL BASE	87	S48987	2	ELBOW, MALE, 90 DEG
35	S21877	1	HEAD, FRONT, CYLINDER	88	S49287	1	RUN TEE, MALE
36	S25487	1	ELBOW, R.A STREET, 1/4 NPT	89	S49387	1	CLAMP, HOSE
37	S25587	2	COMPOUND, TEFLON, SEALANT (CC)	90	S49987	1	VALVE, QUICK EXHAUST
38	S25687	0.5	LOCKING COMPOUND MEDIUM STRGTH (CC)	91	S50287	1	RING, PANEL MOUNT
39	S25787	0.01	LUBRICANT, MOLY PASTE (OZ)	92	S50687	1	LUBRICATOR
40	S26387	6	WASHER, LOCK, 1/4	93	S50987	4	BOLT, CARRIAGE, 1/4-20 X 1L
41	S30587	2	LETTER,ADHESIVE IDENTIFICATION	94	S51287	1	HEAD, JR AIR TOOL
42	S31487	0.05	OIL, DTE 24 HYDRAULIC (QT)	95	S51787	1	GROMMET, HOSE
43	S31589	1	OIL, LUBRICATION, & BOTTLE	96	S51987	1	HOSE ASSY, FOOT CONTROL S750
44	S31788	1	DECAL, NAME PLATE	97	S52587	1	FILTER
45	S32687	2	SCREW, CAP, 1/4-20 X 1.75 L	98	S52987	1	PIN, CAM PIVOT
46	S32787	6	NUT, HEX, 1/4-20	99	S52687	1	SPRING, GRIPPER CLOSING
47	S34187	4	WASHER, FLAT, .19 X .44 X .05	100	S67587	1	TEE, UNION, 1/4
48	S34287	6	LOCK WASHER, 3/8 ID	101	S69587	8	SCREW, BUTTON HD, #10-32 X 3/8
49	S36887	3	ELBOW, MALE R.A, 1/4 NPT X 3/8 TUBE	102	S75091	1	INSERT, PACKAGING, S750 #1
50	S37387	3	COUPLER, MALE, 1/4 NPT	103	S75092	1	INSERT, PACKAGING, S750 #2
51	S37487	2	TEE, STREET	104	S75093	1	INSERT, PACKAGING, S750 #3
52	S39387	1	DECAL, DTE 24 REQUIREMENT	105	S76287	1	DECAL, CAUTION
53	S39787	0.25	COMPOUND,GASKET&JOINT SEALANT (OZ)				

UES Promura
10-12 McWilliam Street
Springvale VIC 3171, Australia
+61 3 9547 5833
sales@uespromura.com.au

www.uespromura.com.au

© Copyright
BAND-IT-IDEX, Inc. 2013
All rights reserved

UES Promura | +61 3 9547 5833 | sales@uespromura.com.au
10-12 McWilliam Street, Springvale VIC 3171 | uespromura.com.au
Distributor reference copy. Technical / issuer particulars retained; contact links localised.

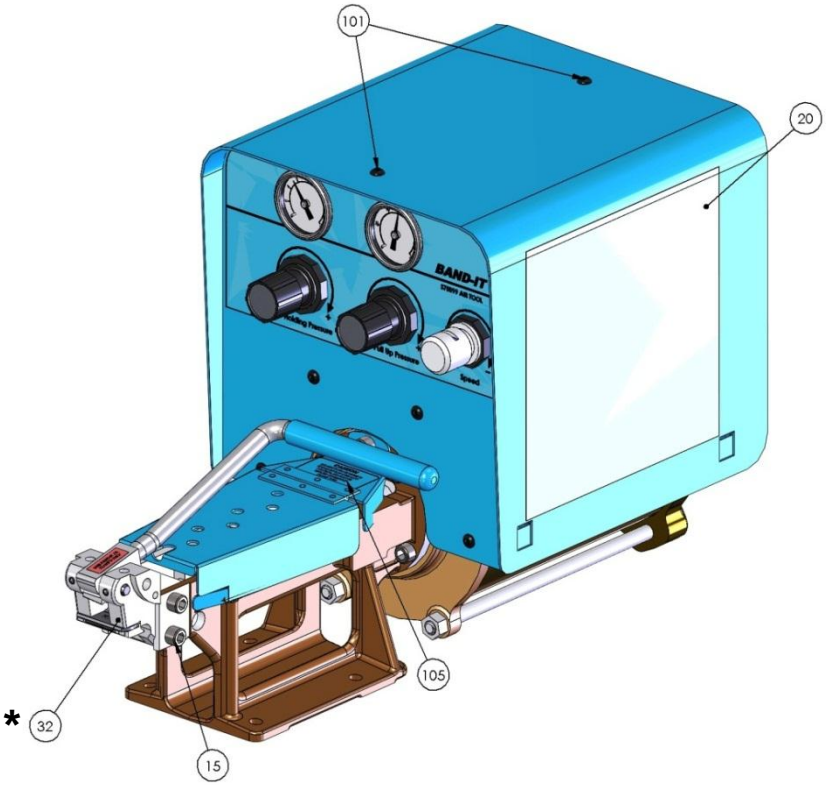

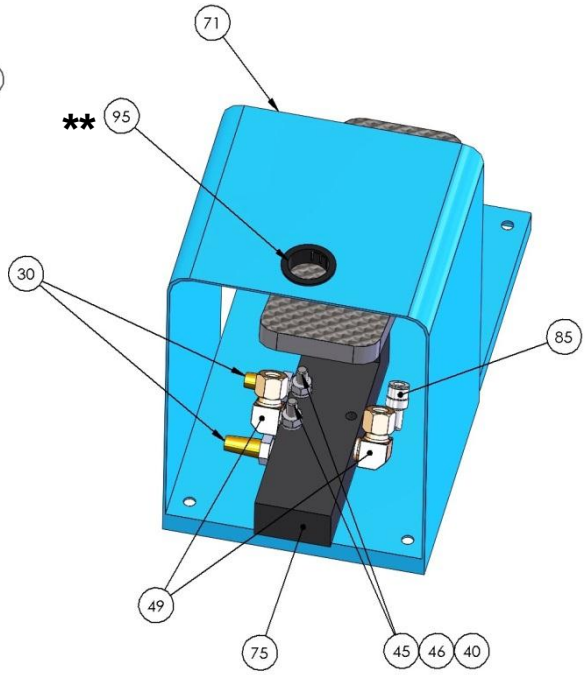

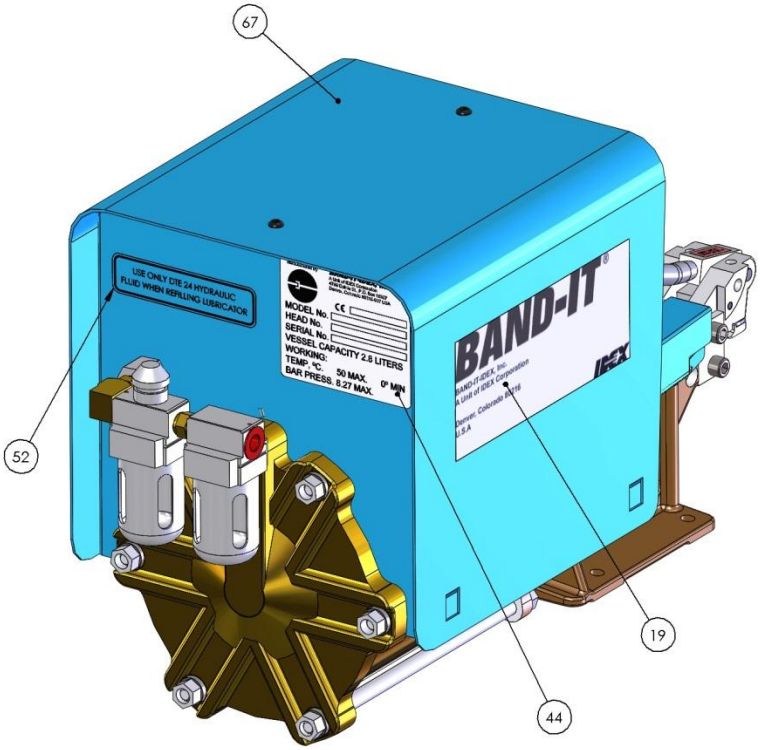

*See sheet 16 for additional part numbers

**Insert S51987 hose assembly through here using R00608 nylon tubing.

UES Promura
10-12 McWilliam Street
Springvale VIC 3171, Australia
+61 3 9547 5833
sales@uespromura.com.au

www.uespromura.com.au

Document# P36687 Rev. I

© Copyright
BAND-IT-IDEX, Inc. 2013
All rights reserved

UES Promura | +61 3 9547 5833 | sales@uespromura.com.au
10-12 McWilliam Street, Springvale VIC 3171 | uespromura.com.au
Distributor reference copy. Technical / issuer particulars retained; contact links localised.

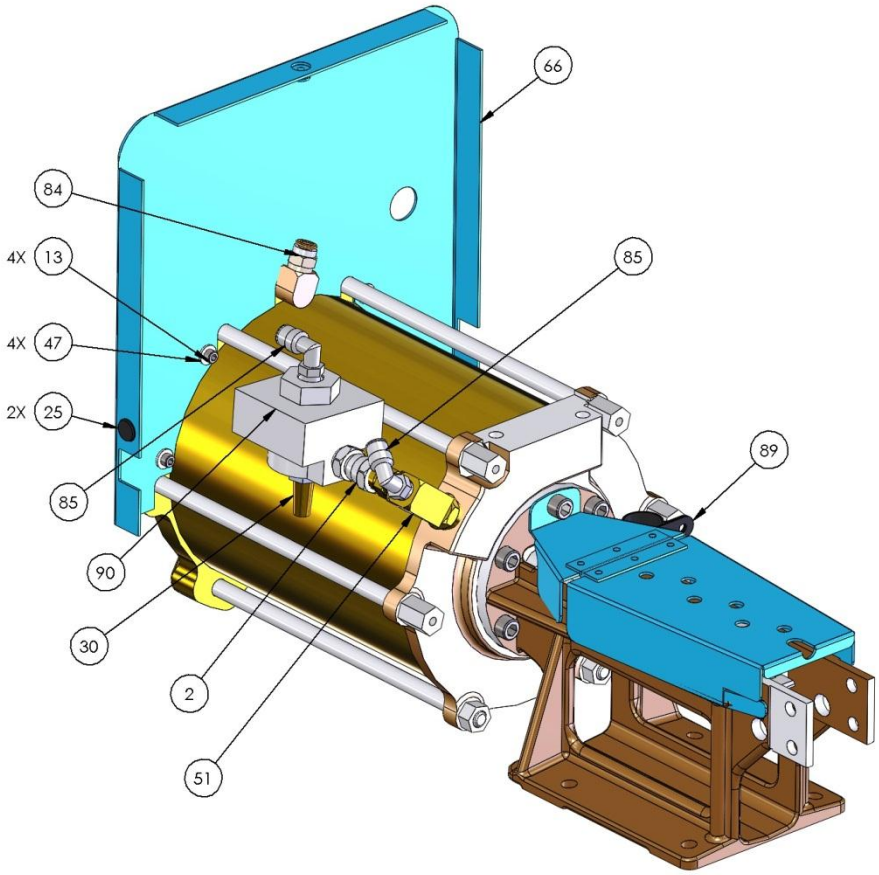

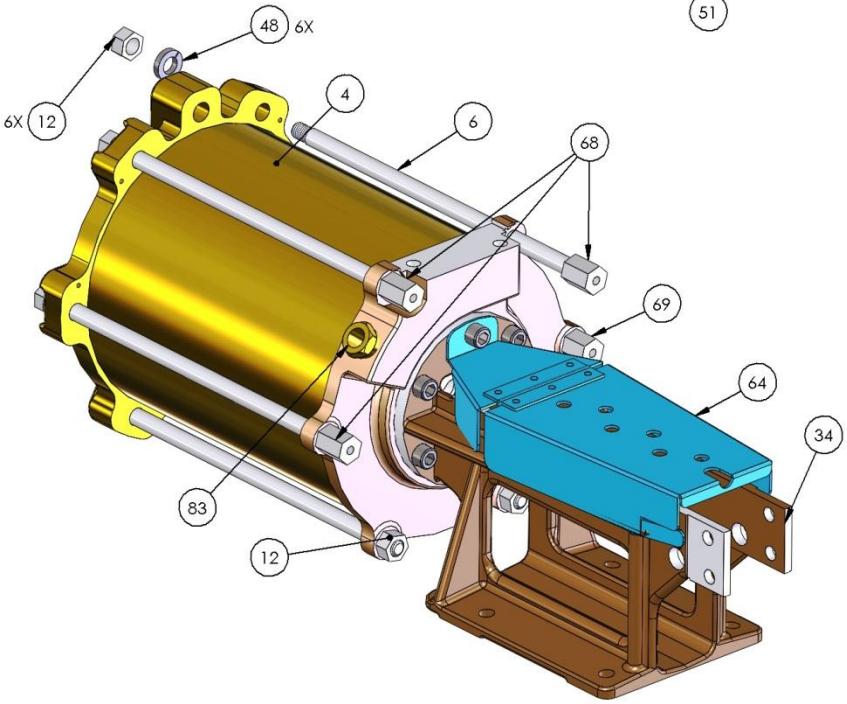

UES Promura
10-12 McWilliam Street
Springvale VIC 3171, Australia
+61 3 9547 5833
sales@uespromura.com.au

www.uespromura.com.au

© Copyright
BAND-IT-IDEX, Inc. 2013
All rights reserved

UES Promura | +61 3 9547 5833 | sales@uespromura.com.au
10-12 McWilliam Street, Springvale VIC 3171 | uespromura.com.au
Distributor reference copy. Technical / issuer particulars retained; contact links localised.

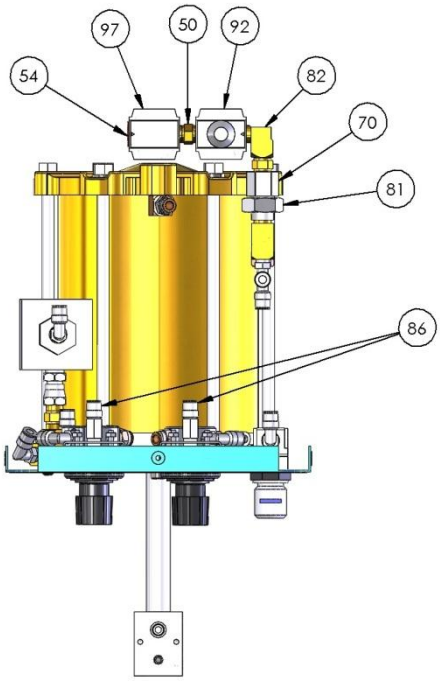

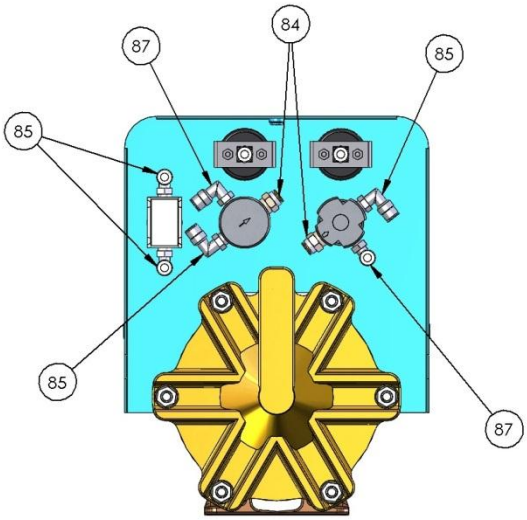

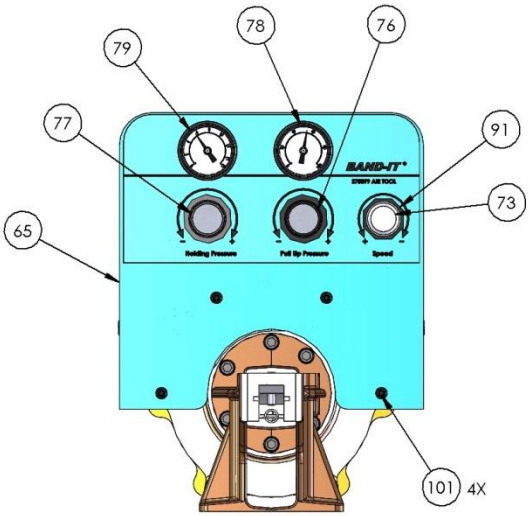

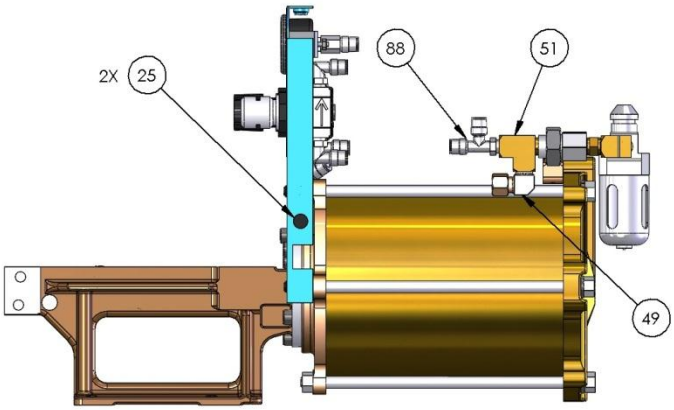

© Copyright
BAND-IT-IDEX, Inc. 2013
All rights reserved

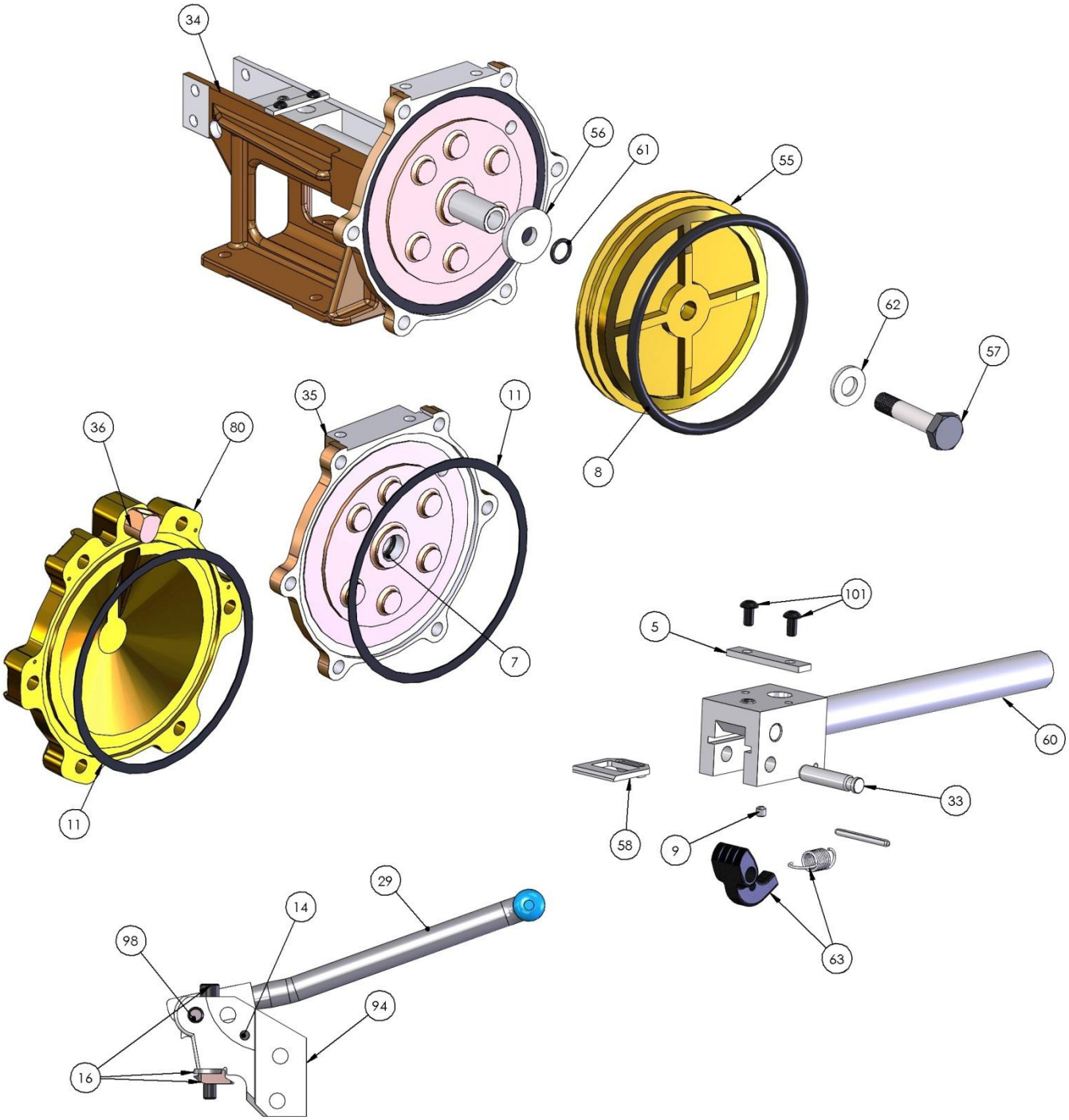

UES Promura
10-12 McWilliam Street
Springvale VIC 3171, Australia
+61 3 9547 5833
sales@uespromura.com.au

www.uespromura.com.au

Document# P36687 Rev. I

© Copyright
BAND-IT-IDEX, Inc. 2013
All rights reserved

Installing BAND-IT Junior and Junior Smooth I.D. Clamps:

1) Choose correct material type, band width and diameter clamp to best satisfy the needs of the application. Adjust air pressure settings per S75099 tool specifications per page 8.

2) Installation of two BAND-IT Junior style clamps per hose end is suggested. Place clamps over hose, then install fitting. Note the location of the fitting's hose barbs in order to locate clamps between barbs for maximum fitting retention. The buckle locations of each clamp should be applied opposite of each other to increase resistance to leak paths.

3) Insert the clamp tail fully into the nose of the tool with the buckle on top. Position the hose assembly inside the clamp in the desired location.

4) Depress the toe end of the foot pedal control to tension clamp, keeping the toe end down until the clamp has been fully tensioned, locked and cut-off is complete. **Caution:** If an oversized clamp is used on the assembly, the piston may travel it's full length and bottom out against the cylinder wall. The tool will sense full pressure and switch to the lower Holding Pressure setting but clamp will not be as tight as required! The clamp should be removed from the tool by pressing the heel of the foot pedal and the operator will need to cut off excess clamp tail, leaving 4" attached for inserting back into the tool head and taking another grip of clamp tail. Cycle tool as explained above.

5) The clamp has now been fully tensioned and is ready to be completed. Allow the tool to cycle into the cut-off mode and fully bleed off until holding pressure is attained. Roll up the hose assembly to position the buckle under the Shear Hook in the head assembly. Using a strong quick pulling action, pull the cut-off handle which will cause the shear hook to generate a strong downward pressure on the buckle. For a moment, just prior to the cut-off, the buckle will be wedged between the shear hook and the backing plate at the mouth of the band slot.

6) Depress the heel end of the foot pedal and retrieve the clamp tail from between the cutter blade and shear plate.

Important advice and warning to user, read notes on page 6 before applying clamps.

UES Promura
10-12 McWilliam Street
Springvale VIC 3171, Australia
+61 3 9547 5833
sales@uespromura.com.au

© Copyright
BAND-IT-IDEX, Inc. 2013
All rights reserved

Installation Instructions for the J93099 Cutter Blade Kit

*Components of this kit are a dimensionally matched set. You may have parts that look similar, but they are different dimensionally. Parts should be discarded and only new matched sets should be used.

1. Remove old Cutter Blade Screws, Cutter Blade and Backing Plate and discard.
2. See illustrations to determine the correct positions for correct component assembly.
3. Hold Cutter Blade and Backing Plate together, insert screws and tighten.

Installation Tip: This kit contains multiple sets of screws with varying lengths. Choose the correct length screw for your application. Threads should protrude through the Cutter Blade by less than ¼" .

Operating Tip: Keep the bolts tight. A loose bolt may cause cracking or premature wear of the Cutter Blade or Backing Plate. This could result in improper clamp tensioning, locking and cutting of excess clamp tail.

Operating Tip: Keep the leading edges of the Cutter Blade and Backing Plate free of metal shavings. Metal shavings will result in clamp material gauging during tensioning. By hand, DO NOT USE POWER TOOLS, clean and hone the leading edges. Honing should polish surfaces, not remove material.

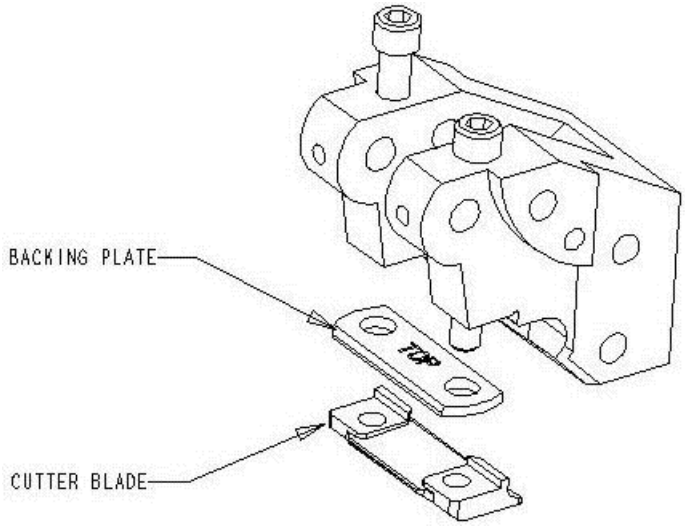

UES Promura
10-12 McWilliam Street
Springvale VIC 3171, Australia
+61 3 9547 5833
sales@uespromura.com.au

www.uespromura.com.au

© Copyright
BAND-IT-IDEX, Inc. 2013
All rights reserved

UES Promura | +61 3 9547 5833 | sales@uespromura.com.au
10-12 McWilliam Street, Springvale VIC 3171 | uespromura.com.au
Distributor reference copy. Technical / issuer particulars retained; contact links localised.

S45799 Gripper and Spring Kit Installation Instructions

1. Extend the tool piston fully forward. The gripper pin should be visible through the access hole.
2. Disconnect air from the tool.
3. Loosen set screw and disconnect gripper spring.
4. Tap out gripper pin, remove old gripper and replace with new.
5. Connect new spring between gripper and spring pin.

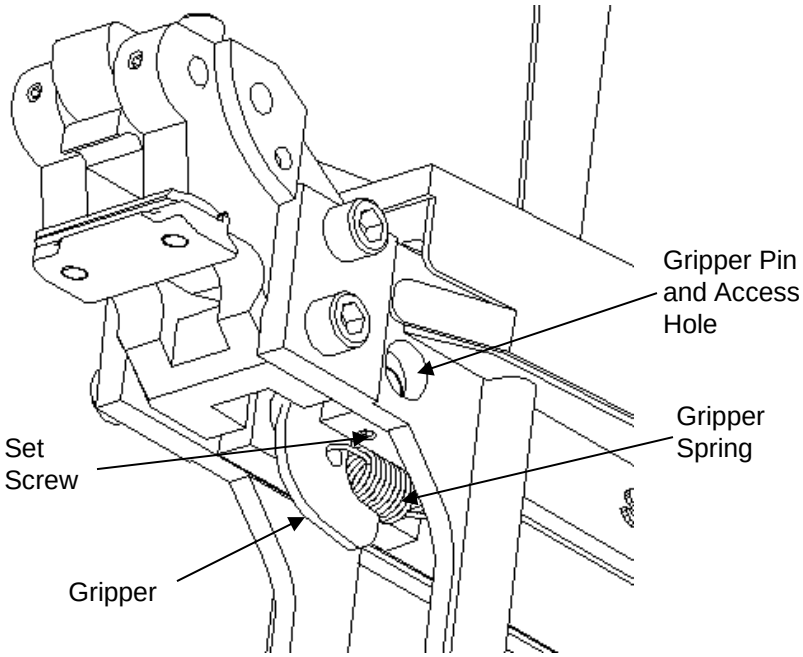

Shear Hook and Handle Assembly

To remove handle, loosen the 2 set screws and tap out pin.

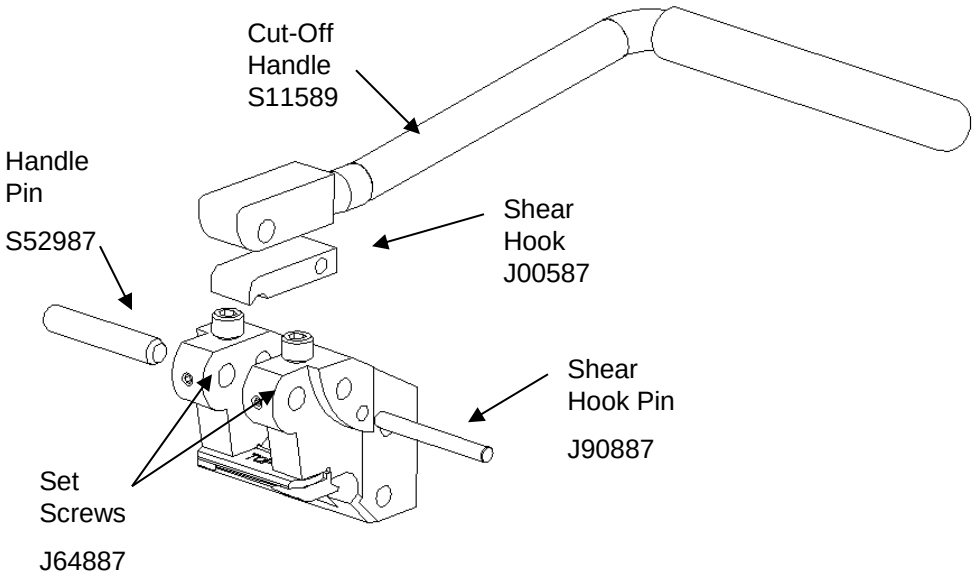

UES Promura
10-12 McWilliam Street
Springvale VIC 3171, Australia
+61 3 9547 5833
sales@uespromura.com.au

www.uespromura.com.au

Document# P36687 Rev. I
© Copyright
BAND-IT-IDEX, Inc. 2013
All rights reserved

UES Promura | +61 3 9547 5833 | sales@uespromura.com.au
10-12 McWilliam Street, Springvale VIC 3171 | uespromura.com.au
Distributor reference copy. Technical / issuer particulars retained; contact links localised.

Remote Reference Gauge Kit
BAND-IT Part Number S67199

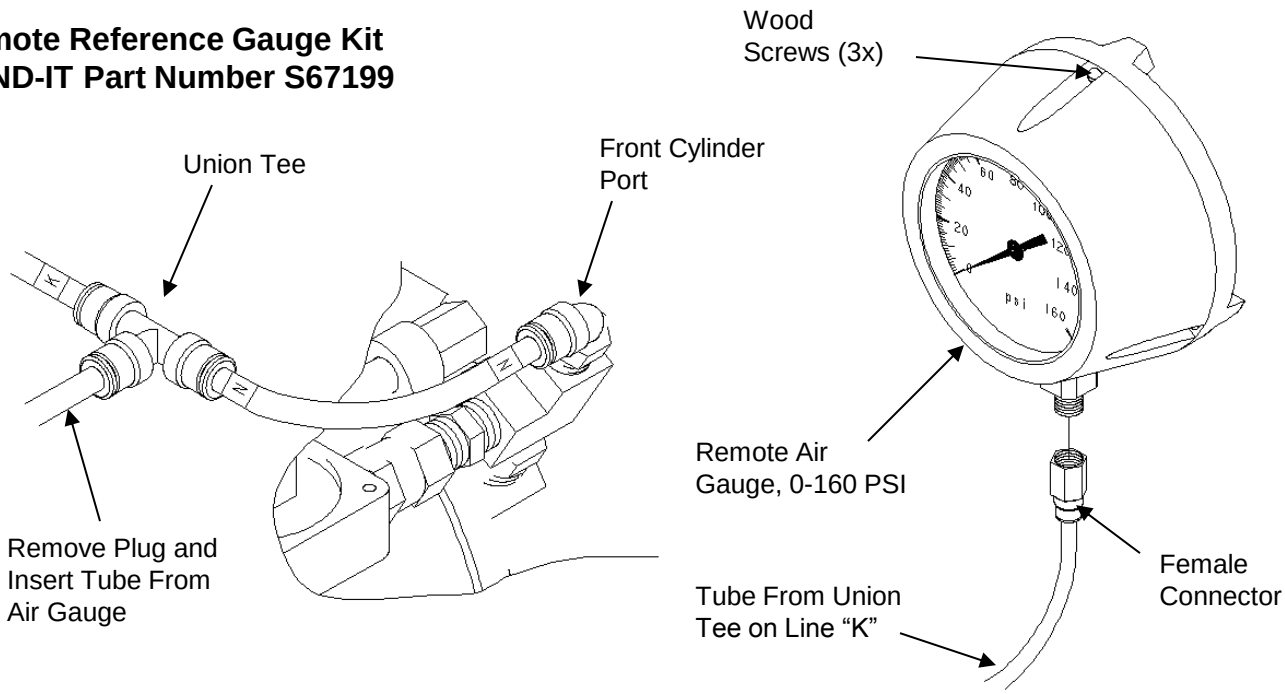

The Remote Reference Air Gauge will read air pressure in the front of the cylinder for both pull-up and holding pressures. To read gauge: When tensioning a clamp, the maximum pressure the gauge reads during the cycle is the pull-up pressure. After the tool switches over to the lower pressure holding cycle and before the clamp is rolled up in preparation for lock, the pressure shown is the holding pressure.

For Tool with a Union Tee Installed at Line "K":

1. Shut off air supply to tool. Completely bleed air tool system.
2. Remove plug from union tee. Connect the tube from the remote air gauge to the port the plug was removed from.
3. Add sealant to the threads of the female connector and attach to the remote air gauge. Mount gauge in desired location either using the 3 wood screws supplied or fasting hardware appropriate for the material the gauge is to be mounted to.

For Tool without a Union Tee Installed at Line "K":

1. Shut off air supply to tool. Completely bleed air tool system.
2. Cut tube line "K" 2 inches from front cylinder port. Insert supplied union tee between cut ends. Connect the tube from the remote air gauge to the union tee.
3. Add sealant to the threads of the female connector and attach to the remote air gauge. Mount gauge in desired location either using the 3 wood screws supplied or fasting hardware appropriate for the material the gauge is to be mounted to.

UES Promura
10-12 McWilliam Street
Springvale VIC 3171, Australia
+61 3 9547 5833
sales@uespromura.com.au

© Copyright
BAND-IT-IDEX, Inc. 2013
All rights reserved

UES Promura | +61 3 9547 5833 | sales@uespromura.com.au
10-12 McWilliam Street, Springvale VIC 3171 | uespromura.com.au
Distributor reference copy. Technical / issuer particulars retained; contact links localised.

Additional Factory Support and Tool Service:

The BAND-IT S75099 Air Tool requires periodic maintenance. The frequency of significant repairs can be greatly reduced by following a simple, regular, preventative maintenance such as maintaining tension on fasteners and proper lubrication as outlined in this manual. If this tool needs repair or complete overhaul, it should be sent to UES Promura for repair support.

In addition to available service parts, BAND-IT has additional factory service available. Service charges in addition to parts replacement charges will be invoiced if tool is not covered by our warranty. Please visit our website for our warranty information.

Contact UES Promura on +61 3 9547 5833 before arranging a tool repair.

UES Promura
10-12 McWilliam Street
Springvale VIC 3171, Australia
+61 3 9547 5833
sales@uespromura.com.au

Document# P36687 Rev. I
© Copyright
BAND-IT-IDEX, Inc. 2013
All rights reserved