Operating Instructions

DRILL ACCESSORY BANDING TOOL

PATENT PENDING

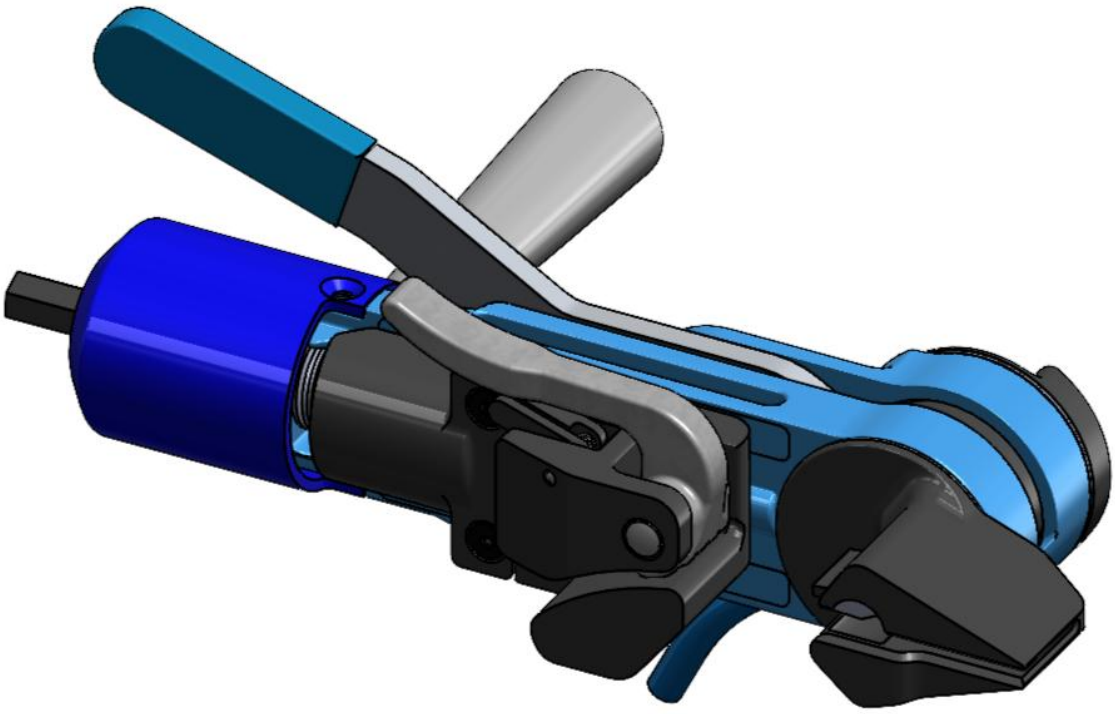

Original Instructions
(Not a translation)

UES Promura
10-12 McWilliam Street
Springvale VIC 3171, Australia
+61 3 9547 5833
sales@uespromura.com.au

www.uespromura.com.au

Document # P01200 Rev.B

© Copyright
BAND-IT IDEX, Inc. 2025
All Rights Reserved

Contents

Warranty and Safety Guidelines 3
Safety Warnings 4
Integrated Safety Features 6
Setup Instructions 7
Drill Calibration 8
Parts List 9
Exploded View 10
Sub-Assembly Views 11
Tool Operation 12
Maintenance 13

Use of Alternate Drills

CAUTION!

This tool is designed to work on any 18V drill with a chuck capable of clamping a 3/8” hex shaft. If using standard Ear-Lokt buckles the drill must be operated in a torque control mode. If using Tru-Lokt™ buckles the drill may be operated in either torque control mode or drill mode, using the buckle wing as an indication of when to stop tensioning. End user should verify preferred drill meets desired performance requirements to ensure a properly tightened clamp on finished assembly. Tool is not to be used with an impact or hammer style drill. Disregard of this caution voids the warranty of the tool and releases BAND-IT of any and all liabilities arising from such misuses.

UES Promura
10-12 McWilliam Street
Springvale VIC 3171, Australia
+61 3 9547 5833
sales@uespromura.com.au

www.uespromura.com.au

Document # P01200 Rev.B

© Copyright
BAND-IT IDEX, Inc. 2025
All Rights Reserved

UES Promura | +61 3 9547 5833 | sales@uespromura.com.au
10-12 McWilliam Street, Springvale VIC 3171 | uespromura.com.au
Distributor reference copy. Technical / issuer particulars retained; contact links localised.

Warranty and Safety Guidelines

WARRANTY

Refer to website for warranty information: uespromura.com.au/document-support/

NOTE: Any performance data published herein is based on laboratory tests, which cannot duplicate conditions that may be encountered in field installations. Such conditions may vary results substantially from those shown (such as abuse in handling and installation. Failure to follow recommended handling and installation practices, abnormal environmental conditions, disregard of operating instructions for BAND-IT tools or non-recommended combinations of BAND-IT products). BAND-IT cannot be responsible for performance characteristics from such variables.

Safety Guidelines

WARNING:

Always wear safety equipment when operating this tool and keep both hands and clothing away from clamp being tensioned. Squeezing force can reach as high as 2 tons. Never attempt to clamp objects which can shatter or otherwise cause bodily harm. Tensioning the clamp can be stopped immediately by releasing the trigger. Detailed instructions are in this manual and the operator is advised to read it and become familiar with calibrating and operating the tool.

IMPORTANT FOR HOSE APPLICATIONS:

- When clamping a hose end, remember that a tighter clamp keeps the fitting more secure, but excess tension can damage the hose. Fitting stem must have prominent barbs for proper retention inside the hose, but must not be sharp to prevent cutting into the hose. Hose, fitting, and clamp must be compatible with each other and the environment used in. If in doubt, consult the hose or fitting manufacturer or call BAND-IT.
- Improperly tightened clamps may result in dangerous finished assemblies, which could cause injuries or property damage.
- Abuse or use of a product outside the manufacturers recommended conditions may cause it to quickly deteriorate and become a safety hazard. This could result in serious injury or property damage.

Only compatible with BAND-IT 3/4", 5/8" 1/2" Ear-Lokt & Tru-Lokt™ clamp assemblies with 201SS banding less than .030" thick.

SAFETY SIGNS

Pinch Point – refer to accompanying documentation

Caution – refer to accompanying documentation

It is recommended to utilize the tether attachment when operating at elevated heights

User should always have a firm grip on both the stability handle and drill when actuating the tension system. Tool can spin freely if stability handle is not utilized and drill can kick at high tension, resulting in possible injury to user.

UES Promura
10-12 McWilliam Street
Springvale VIC 3171, Australia
+61 3 9547 5833
sales@uespromura.com.au

© Copyright
BAND-IT IDEX, Inc. 2025
All Rights Reserved

Safety Warnings

1. Pinch Points
    1. There are 2 main pinch points on the tool during normal operation
    2. Between the nose and gripper body (**A**)
    3. Between the limiter body and limiter actuator (**B**)
    4. User should keep hand engaged with stability handle (**C**) at all times when operating to reduce occurrence of pinch point or tool spin hazard

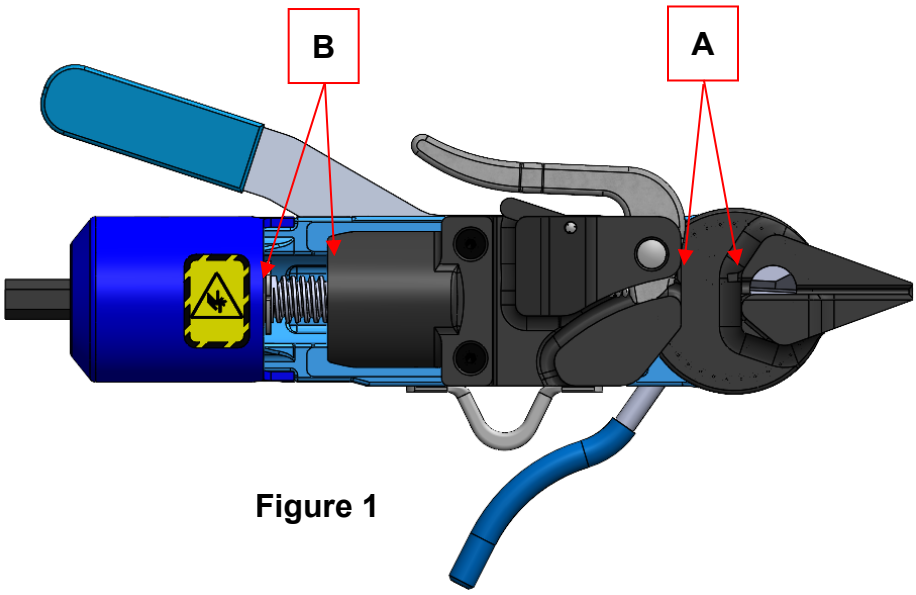

Figure 1

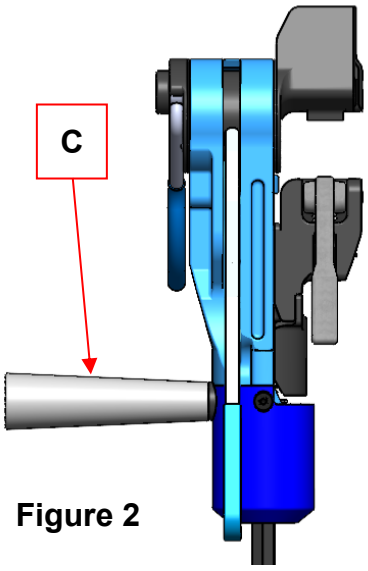

Figure 2

2. Drill over-torque
    1. If drill mode is used during tensioning the clamp assembly can reach its max tension and torque will no longer be applied through the lead screw and instead through the drill causing it to kick/twist.
    2. User should always operate drill in torque control mode or use the Tru-Lokt™ buckle wing as an indicator when appropriate tension has been achieved.

UES Promura
10-12 McWilliam Street
Springvale VIC 3171, Australia
+61 3 9547 5833
sales@uespromura.com.au

© Copyright
BAND-IT IDEX, Inc. 2025
All Rights Reserved

UES Promura | +61 3 9547 5833 | sales@uespromura.com.au
10-12 McWilliam Street, Springvale VIC 3171 | uespromura.com.au
Distributor reference copy. Technical / issuer particulars retained; contact links localised.

3. Sound Emission

Model C001DA, Drill Accessory Banding Tool	
DECLARED DUAL-NUMBER NOISE EMISSION VALUES In accordance with ISO 4871	
	Normal Operating Mode
Measured A-weighted sound power level, L_{WA}, in decibels	88
Uncertainty, K_{WA}, in decibels	3
Measured A-weighted emission sound pressure level, L_{PA} at the operator's position, in decibels	77
Uncertainty, K_{PA}, in decibels	3
Values determined according to noise test code given in EN 60745-1, using the basic standard ISO 4871. NOTE – The sum of a measured noise emission value and its associated uncertainty represents an upper boundary of the range of values which is likely to occur in measurements. It is recommended the user wear hearing protection.	

4. Vibration

1. The declared vibration total value may be used for comparing one tool with another.
2. The declared vibration total value may also be used in a preliminary assessment of exposure.

Vibration total values (triaxial vector sum) determined according to EN 60745:	
Normal mode	Vibration emission value ah = 8.36 m/s2
	Uncertainty K = 7.01 m/s2

© Copyright
BAND-IT IDEX, Inc. 2025
All Rights Reserved

UES Promura | +61 3 9547 5833 | sales@uespromura.com.au
10-12 McWilliam Street, Springvale VIC 3171 | uespromura.com.au
Distributor reference copy. Technical / issuer particulars retained; contact links localised.

Integrated Safety Features

The Drill Accessory Banding Tool is designed with tension application disconnect features at both the front and rear of the gripper body travel. These disconnects are intended to prevent the tool from applying torque through the lead screw prior to the gripper body bottoming out on either end of the lead screw and prevent lock up and kicking of the tool, thus reducing the risk of operator harm. User should verify functionality of both disconnect features prior to use.

Front Disconnect:
Actuate tool to drive gripper body to forward most position. The griper body will bottom out, compress the Belleville washer stack and create a clicking sound. The Belleville washers will automatically reset the lead screw and gripper body threads for normal operation. If front disconnect is engaged verify e-ring and washers are still in original position (figure 14).

Rear Disconnect:
Actuate tool to drive gripper body to rearward most position. The limiter actuator will disengage the inner and outer ring to prevent torque from being transferred to the lead screw. To re-engage the inner & outer ring drive the gripper body forward until the 2 parts reconnect. User may need push the drill and tool in opposite directions to allow parts to re-engage. If tool does not reset after driving gripper body forwards, the limiter assembly will need to be serviced to return to normal operation.

UES Promura
10-12 McWilliam Street
Springvale VIC 3171, Australia
+61 3 9547 5833
sales@uespromura.com.au

© Copyright
BAND-IT IDEX, Inc. 2025
All Rights Reserved

Setup Instructions

1. Read safety instructions and operator's manual for the chosen drill this tool is attached too
    1. Remove tool from packaging
    2. Read safety card attached to stability handle
    3. Remove rubber cap and safety card from stability handle
    4. Thread stability handle and saddle washer into unused hole on limiter body/frame, to hand tight
2. Check to make sure drill is properly set up for use with BAND-IT Drill Accessory Banding Tool as follows:
    1. Drill is set to proper torque control mode
    2. Drill is set to slowest speed
    3. See page 6 for drill calibration procedure
3. Charge drill battery according to the operator's manual
4. To mount the drill onto the BAND-IT drill accessory banding tool:
    1. Set drill to desired torque control set point
    2. Set drive direction to neutral, if applicable
    3. Loosen chuck jaws to accept banding tool input shaft
    4. Insert tool input shaft into chuck
    5. Tighten chuck onto input shaft per manufacturer specification
    6. Set drive direction to necessary direction for operation
    7. Connect tether to tether hook on tool
5. This tool was designed for use with BAND-IT 3/4", 5/8" 1/2" Ear-Lokt & Tru-LoktTM clamp assemblies with 201SS banding less than .030" thick. Do not attempt to use any other type or size of clamp.

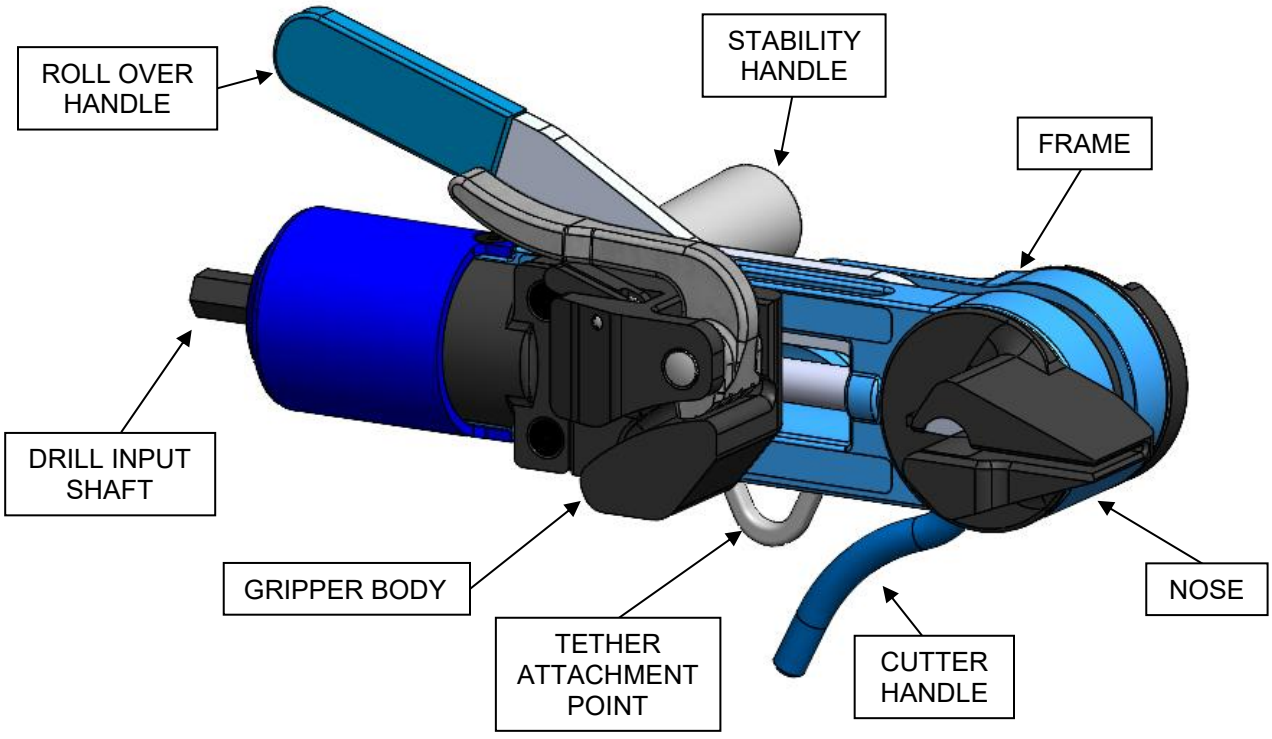

Figure 3

© Copyright
BAND-IT IDEX, Inc. 2025
All Rights Reserved

Drill Calibration

- To verify desired drill meets or exceeds BAND-IT's recommended performance specifications, follow the below steps
  - Set drill to highest clutch setting and slowest speed
  - Use Tru-Lokt™ clamp assembly
  - Tension band until clutch torques out or wing collapses
  - If proper tension is reached prior to clutching out, lower torque setting and re-test
  - Verify buckle wing is collapsed, reference Tru-Lokt™ product page
    - Once correct clutch setting has been identified for Tru-Lokt™, the same torque setting can be used for ¾" Ear-Lokt buckles.
  - If wing does not fully collapse, torque mode is not sufficient to meet BAND-IT's minimum performance specifications
    - To achieve proper installation force, tool must be operated in drill mode with a Tru-Lokt™ buckle
    - NOT RECOMMENDED FOR USE IN DRILL MODE WITH EAR-LOKT BUCKLE ASSEMBLIES

- Drill must have maximum output torque spec greater than 250 in-lb (28 Nm)
- Drill must only be operated in the slowest speed setting to ensure most accurate tension application

Important: Drills should only be operated in their slowest speed setting. Drills should have a maximum torque spec greater than 250 in-lbs (28 Nm). Changing speed and clutch settings will alter tension output. Drill Trigger should be depressed fully by the operator to attain correct and consistent, tension when installing clamps. Tension output may vary from drill to drill, at the same setting, depending on condition and wear of internal components.

Caution: Improperly tightened clamps may result in dangerous assemblies, which could cause injuries or property damage.

Using correctly sized clamps (diameter) will, in most cases, eliminate the need to pull on clamp tail more than once. Gripper body moves approximately 2.5". On occasion, if needed, large size clamps can be installed by taking several bites (clamp tail feeds out through back of gripper body). The tool features a built-in disengaging mechanism to prevent tension screw from jamming. At the end of the gripper body travel the safety clutch will engage and the user will hear a ratcheting sound. Excessive use of this feature will wear out the drill clutch, safety clutch and/or tension screw prematurely.

Reach out to your BAND-IT representative for more information.

UES Promura
10-12 McWilliam Street
Springvale VIC 3171, Australia
+61 3 9547 5833
sales@uespromura.com.au

© Copyright
BAND-IT IDEX, Inc. 2025
All Rights Reserved

Parts List

ITEM NO.	PART NUMBER	DESCRIPTION	QTY.
1	A07687	SCREW, SET, M6X1.0 X 6L	1
3	C01201	FRAME, DABT	1
4	C01202	NOSE, DABT	1
5	C01203	NOSE BACKING, DABT	1
6	C01204	CUTTER, DABT	1
7	C01205	SPACER, NOSE HDPE, DABT	2
8	C01206	CUTTER HANDLE, DABT	1
9	C01207	ROLLOVER HANDLE, DABT	1
10	C01208	GRIPPER BODY, DABT	1
11	C01209	TENSION SCREW, DABT	1
12	C01210	LIMITER ACTUATOR, DABT	1
13	C01211	LIMITER BODY, DABT	1
14	C01212	INNER RING, DABT	1
15	C01213	OUTER RING, DABT	1
16	C01214	GRIPPER HOLD, DABT	1
17	C01215	TETHER, DABT	1
18	C01216	STABILITY HANDLE, DABT	1
19	C01217	SADDLE WASHER, DABT	1
20	C01220	BEARING, ROLLER, NOSE, DABT	2
21	C01221	SCREW, CAP, M8 X 1.25 X 25MM	2
22	C01222	DETENT, BALL SPRING, M6 X 1	1
23	C01223	PIN, GROOVED, 5/16 X 1-1/4	1
24	C01224	SCREW, SET, M14X2.0X14L	1
25	C01225	PIN, GROOVED, 3mm X 20mm	1
26	C01226	SCREW, FLAT, M4 X 8mm	6
27	C01227	SPRING, TORSION, 360DEG	1
28	C01228	E-RING EXTERNAL, .440 DIA,	1
29	C01229	WASHER, BLLVLL, 0.5 x.083 x .067	3
30	C01230	PIN, SPIROL, 2mmX14mm	1
31	C01231	SPRING, COMP, .594 x .720 x .750	1
34	C01260	DECAL, C001DA	1
35	C01687	THRUST BEARING	1
36	C01887	BAND GRIPPER, C00169	1
37	C03187	SPR, COMP, .42 DIA X .75L	1
38	H80050	Ball Bearing for 15 mm Shaft Dia	1
42	T25997	DECAL, PINCH	1

Table 1

Notes:

- Apply Item 2 (Vibra-Tite) to threads of:
  - Item 18 (Stability Handle)
- Apply Item 32 (Grease) to:
  - Item 6 (Cutter) outer diameter
  - Item 11 (Tension Screw) threads
  - Item 20 (Bearing, Roller) outer diameter
- Apply Item 38 (Loctite) to threads of:
  - Item 21 (Screw)
  - Item 22 (Detent)
  - Item 24 (Set Screw)
  - Item 26 (Screw)
- Tighten the following:
  - Item 21 to 90 in-lbs (11 Nm).
  - Item 1 & 26 to 25 in-lbs (3 Nm).
- Adjust Item 22 (Detent) for positive detent action when item 8 (Cutter Handle) is actuated.

Spare Parts Kits:

- Cutter Sub System: C01252
- Tension Sub System: C01254

UES Promura
10-12 McWilliam Street
Springvale VIC 3171, Australia
+61 3 9547 5833
sales@uespromura.com.au

© Copyright
BAND-IT IDEX, Inc. 2025
All Rights Reserved

www.uespromura.com.au

UES Promura | +61 3 9547 5833 | sales@uespromura.com.au
10-12 McWilliam Street, Springvale VIC 3171 | uespromura.com.au
Distributor reference copy. Technical / issuer particulars retained; contact links localised.

Exploded View

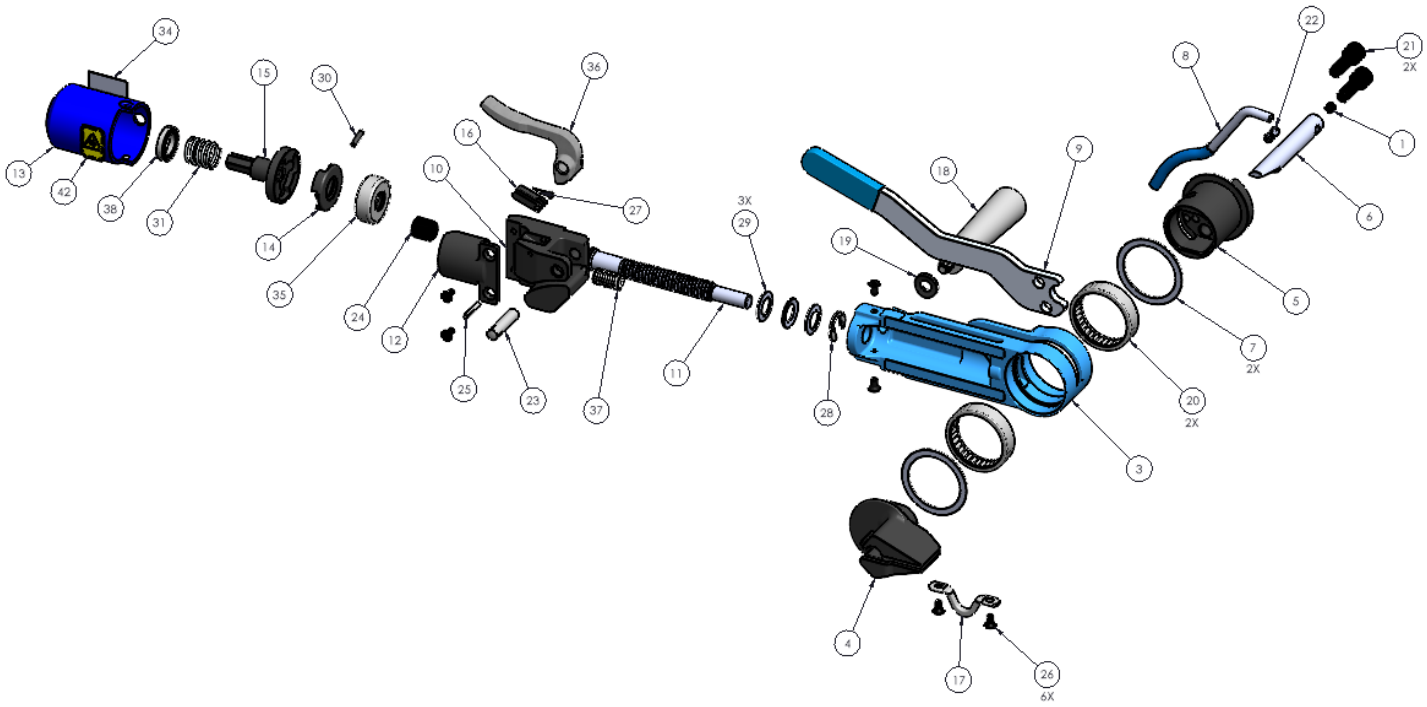

Figure 4

© Copyright
BAND-IT IDEX, Inc. 2025
All Rights Reserved

UES Promura | +61 3 9547 5833 | sales@uespromura.com.au
10-12 McWilliam Street, Springvale VIC 3171 | uespromura.com.au
Distributor reference copy. Technical / issuer particulars retained; contact links localised.

Sub-Assembly Views

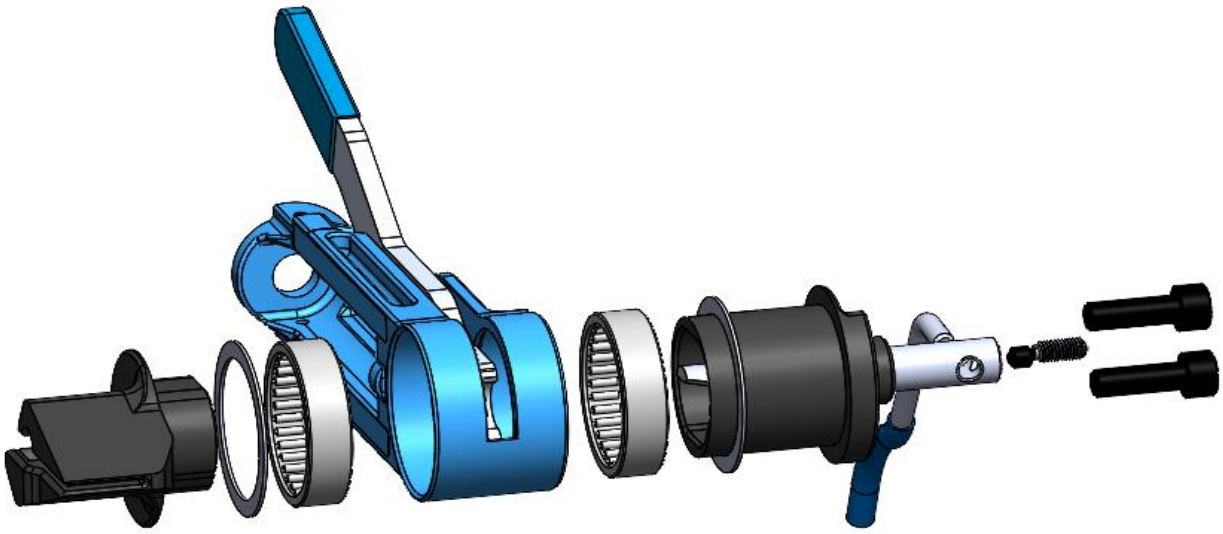

Figure 5

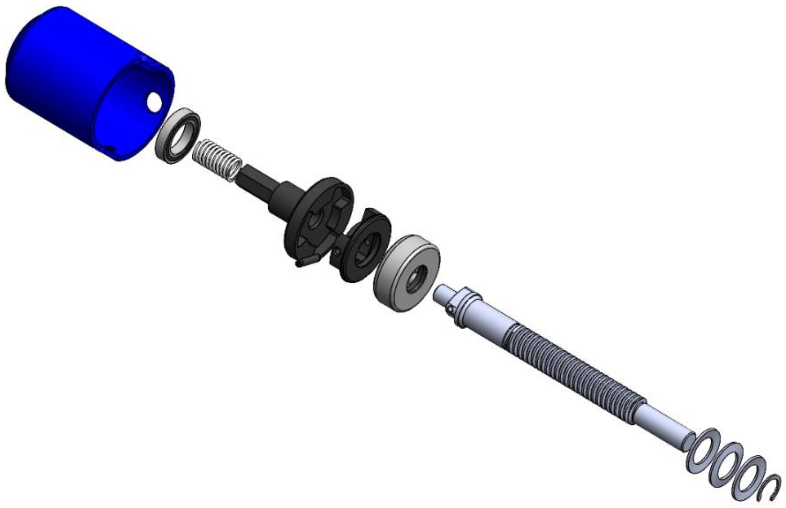

Figure 6

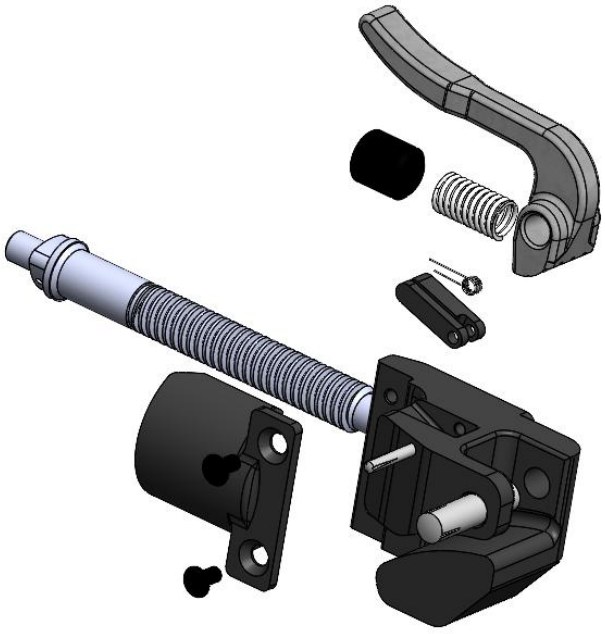

Figure 7

UES Promura
10-12 McWilliam Street
Springvale VIC 3171, Australia
+61 3 9547 5833
sales@uespromura.com.au

www.uespromura.com.au

Document # P01200 Rev.B

© Copyright
BAND-IT IDEX, Inc. 2025
All Rights Reserved

UES Promura | +61 3 9547 5833 | sales@uespromura.com.au
10-12 McWilliam Street, Springvale VIC 3171 | uespromura.com.au
Distributor reference copy. Technical / issuer particulars retained; contact links localised.

Tool Operation

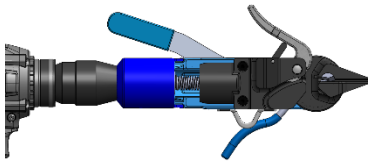

1. Set drill to desired clutch setpoint and reverse direction. Return rollover and cutoff handles to start position. Drive gripper body forwards within ¼" of nose. Flip gripper up to open position and engage gripper hold.

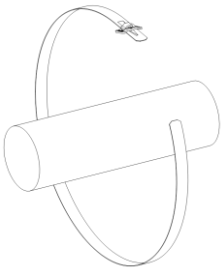

2. Wrap band around object to be clamped. Insert band through buckle once for single-wrap or twice for double-wrap.

3. If desired, you may pre-form a clamp in the same fashion as step 2.

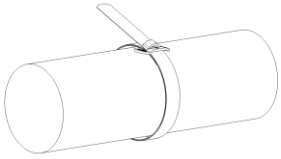

4. Position the tie on the object you are clamping. Pull the wrapped tie hand-tight. Slightly bend the tail up to keep the clamp in place.

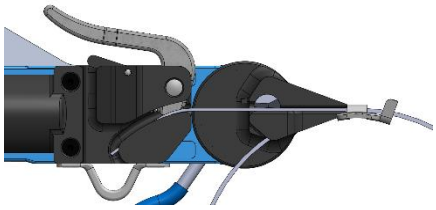

5. Insert band into nose, side loading the band until it is fully inserted. Ensure tail is long enough to engage with gripper. Release gripper hold and engage gripper with tail.

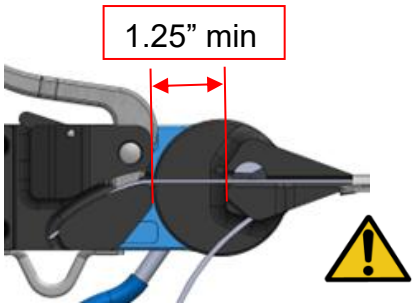

6. **Caution, drill may kick at higher tensions.** Activate drill trigger to pull band until desired tension is reached. Gripper body must travel far enough to produce minimum 1.25" gap between front of gripper body and rear of nose. Nose will not complete full roll over if gripper body does not travel minimum required distance.

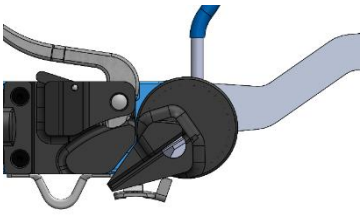

7. Actuate roll over handle to fold band. Full roll over occurs when tool nose contacts ears.

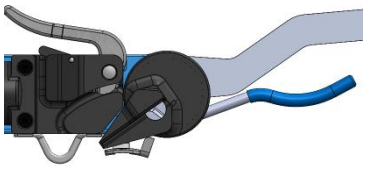

8. Actuate cut off handle to shear band. Push tool in a forward motion to remove from band and ensure rolled over tail does not release clamping force. Hammer down ears to lock rolled tail into position.

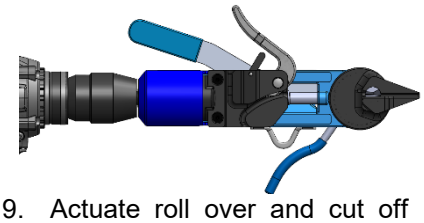

9. Actuate roll over and cut off handles back to start position. Release gripper and remove scrap tail.

UES Promura
10-12 McWilliam Street
Springvale VIC 3171, Australia
+61 3 9547 5833
sales@uespromura.com.au

www.uespromura.com.au

Document # P01200 Rev.B

© Copyright
BAND-IT IDEX, Inc. 2025
All Rights Reserved

UES Promura | +61 3 9547 5833 | sales@uespromura.com.au
10-12 McWilliam Street, Springvale VIC 3171 | uespromura.com.au
Distributor reference copy. Technical / issuer particulars retained; contact links localised.

Maintenance

1. Tension Screw Lubrication
    1. Every 1000 clamps lubricate tension screw with extreme pressure lithium grease, or equivalent
    2. Ensure gripper body is all the way forward on tension screw
    3. Apply grease to approximately 1/2" long section of tension screw
    4. Actuate tool without a clamp 5 times to drive gripper body over full threaded portion of tension screw and spread lubricant evenly on threads
    5. To order more lubricant, specify BAND-IT #M69887

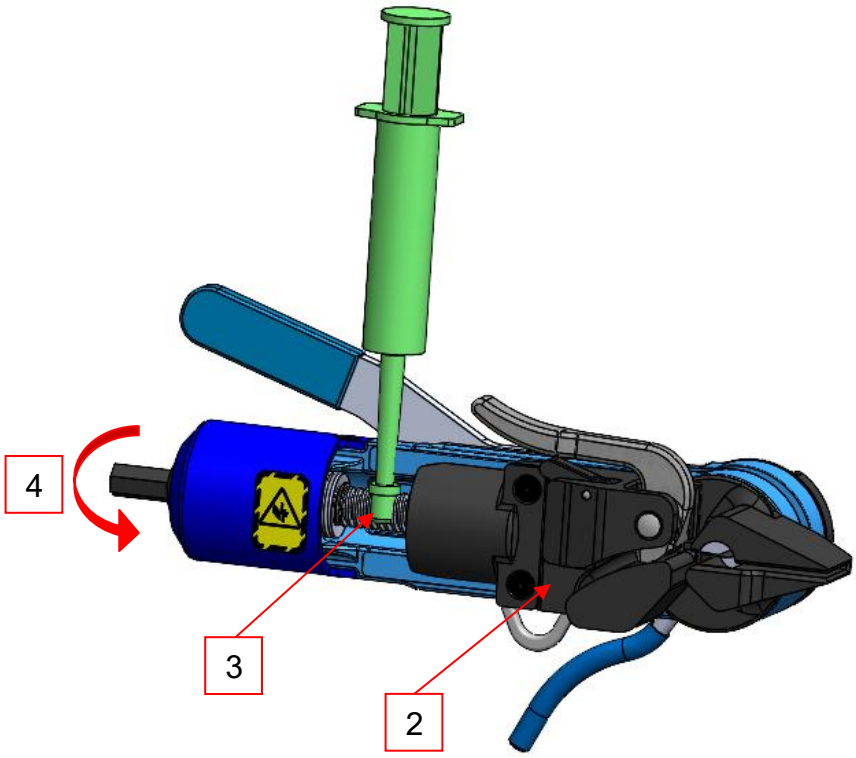

Figure 8

UES Promura
10-12 McWilliam Street
Springvale VIC 3171, Australia
+61 3 9547 5833
sales@uespromura.com.au

© Copyright
BAND-IT IDEX, Inc. 2025
All Rights Reserved

UES Promura | +61 3 9547 5833 | sales@uespromura.com.au
10-12 McWilliam Street, Springvale VIC 3171 | uespromura.com.au
Distributor reference copy. Technical / issuer particulars retained; contact links localised.

2. Cutter & Nose Replacement: **Spare Parts Kit C01252**
    1. Remove M6 set screw from end of cutter
    2. Remove cutter handle from cutter
    3. Remove cutter out of nose/nose backing
    4. Remove M6 SHCS from nose backing
    5. Remove nose out of tool
    6. Install nose into tool, ensure nose spacer is in correct location
    7. Install M6 SHCS through nose backing and rollover handle into nose with medium strength thread locker. Torque to 90 in-lb (11 Nm)
    8. Install cutter into nose/nose backing in orientation as shown
    9. Install cutter handle into cutter in orientation as shown
    10. Install M6 set screw with medium strength thread locker. Torque to 25 in-lb (3 Nm)

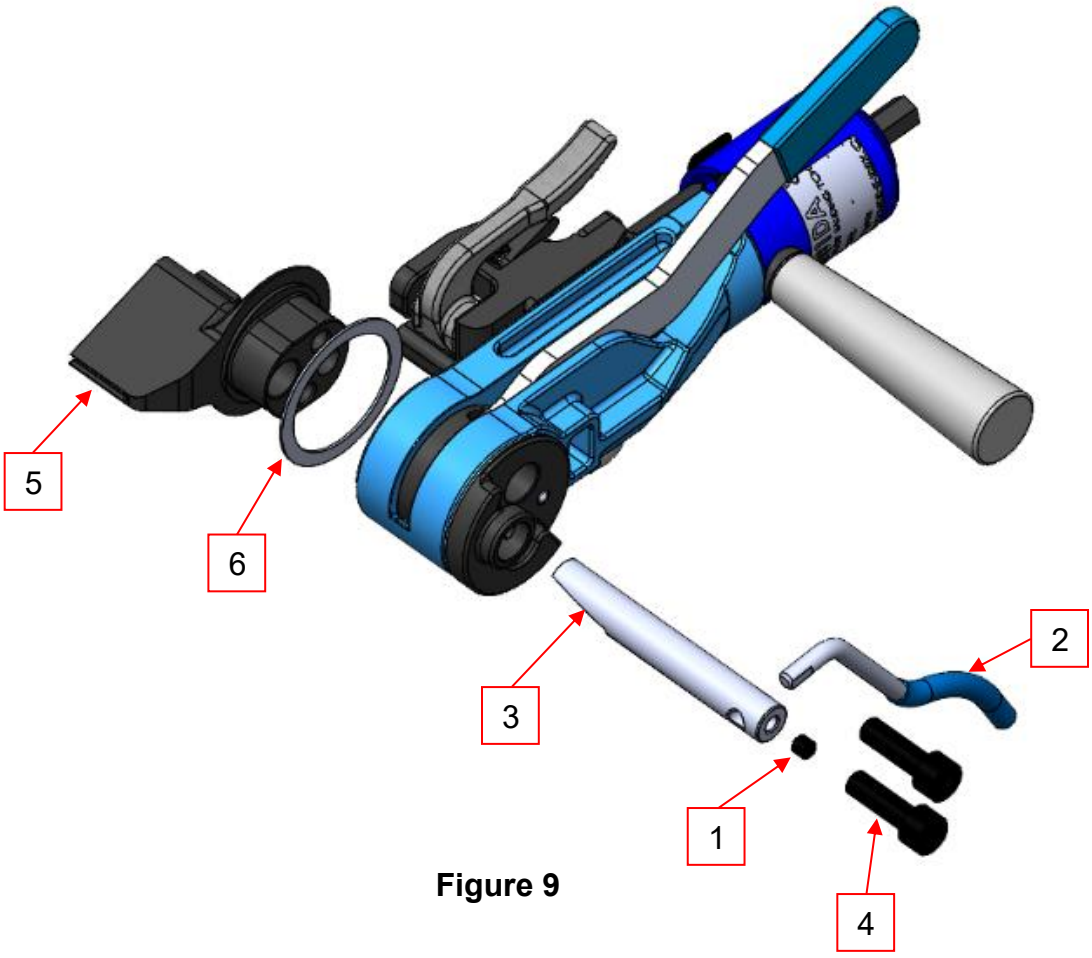

Figure 9

© Copyright
BAND-IT IDEX, Inc. 2025
All Rights Reserved

UES Promura | +61 3 9547 5833 | sales@uespromura.com.au
10-12 McWilliam Street, Springvale VIC 3171 | uespromura.com.au
Distributor reference copy. Technical / issuer particulars retained; contact links localised.

3. Gripper Body & Tension Sub Assembly Replacement: **Spare Parts Kit C01254**
    1. Drive Gripper Body to front of screw
    2. Remove Limiter Body & Outer Ring from tool
    3. Remove e-ring from tension screw
    4. Reverse tension screw until threads disengage from gripper body, remove from tool
    5. Remove Gripper Body and Belleville washers from tool
    6. Reverse Steps for Installation
    7. Install M4 screw with medium strength thread locker. Torque to 25 in-lb (3 Nm)
    8. Ensure proper orientation of Belleville washers

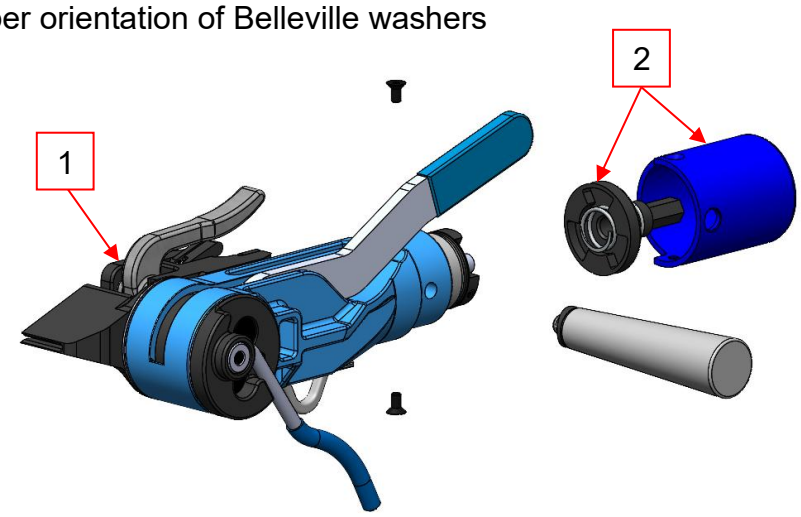

Figure 10

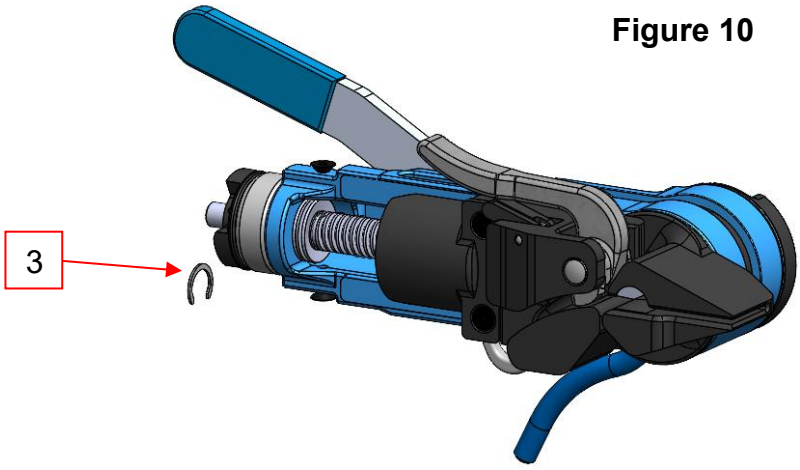

Figure 11

© Copyright
BAND-IT IDEX, Inc. 2025
All Rights Reserved

UES Promura | +61 3 9547 5833 | sales@uespromura.com.au
10-12 McWilliam Street, Springvale VIC 3171 | uespromura.com.au
Distributor reference copy. Technical / issuer particulars retained; contact links localised.

Figure 12

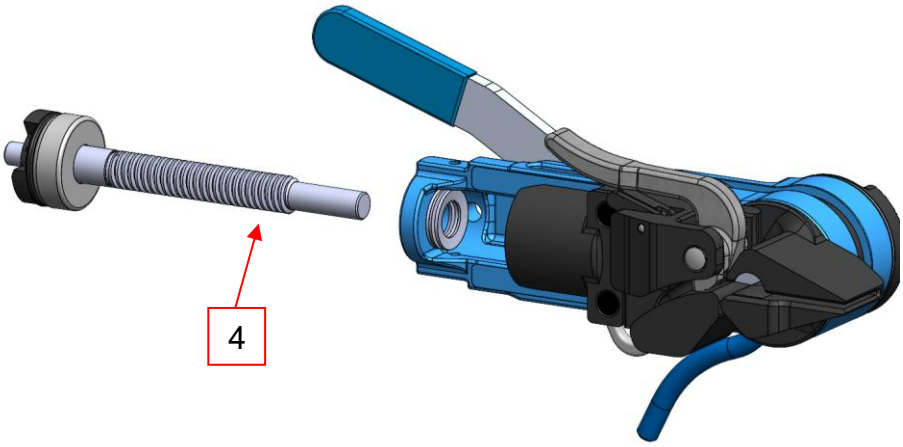

Figure 13

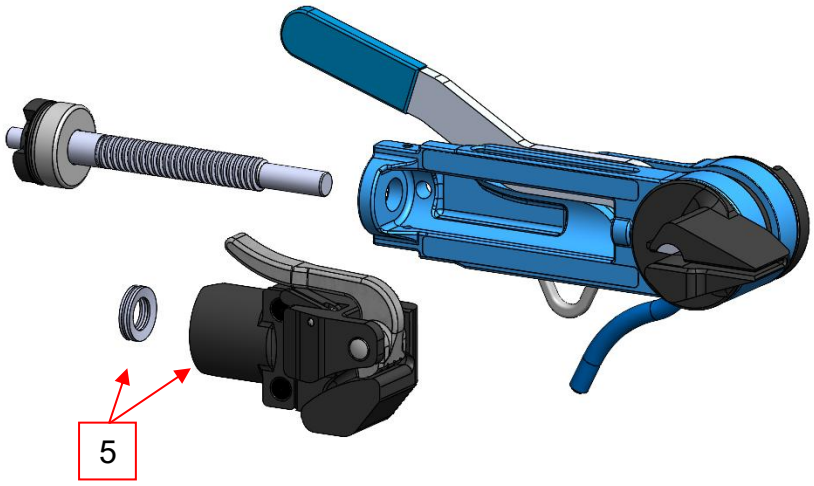

Figure 14

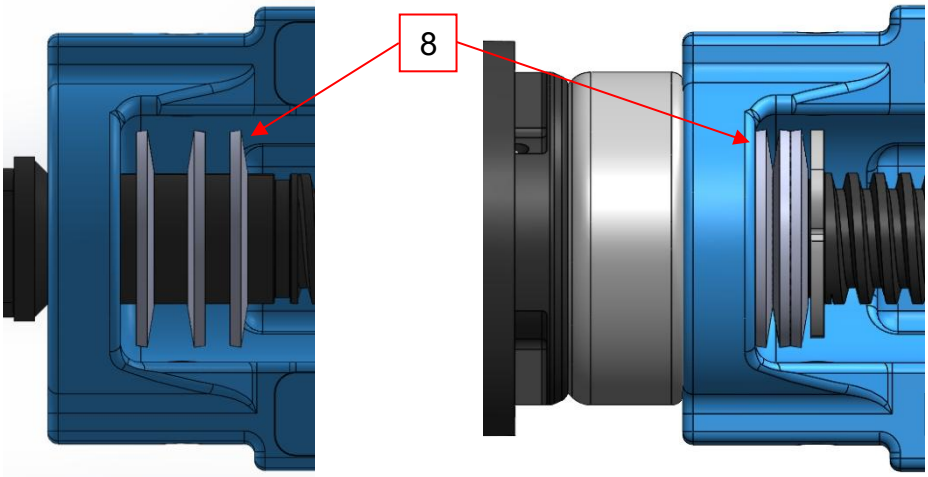

UES Promura
10-12 McWilliam Street
Springvale VIC 3171, Australia
+61 3 9547 5833
sales@uespromura.com.au

© Copyright
BAND-IT IDEX, Inc. 2025
All Rights Reserved

4. Gripper Replacement: **Included in Gripper & Tension Spare Parts Kit**
    1. Complete steps 3a-3e
    2. Back off set screw to remove spring force on gripper
    3. Remove gripper pin from gripper body
        i. Hammer & punch or similar is needed
    4. Remove gripper from gripper body
    5. Align new gripper in same orientation as previous
    6. Insert gripper pin by hand
    7. Use hammer & punch to install pin until flush with face
    8. Tighten set screw until gap between gripper and gripper body is between 0.0” & 0.010”
    9. Actuate gripper lever to ensure smooth actuation

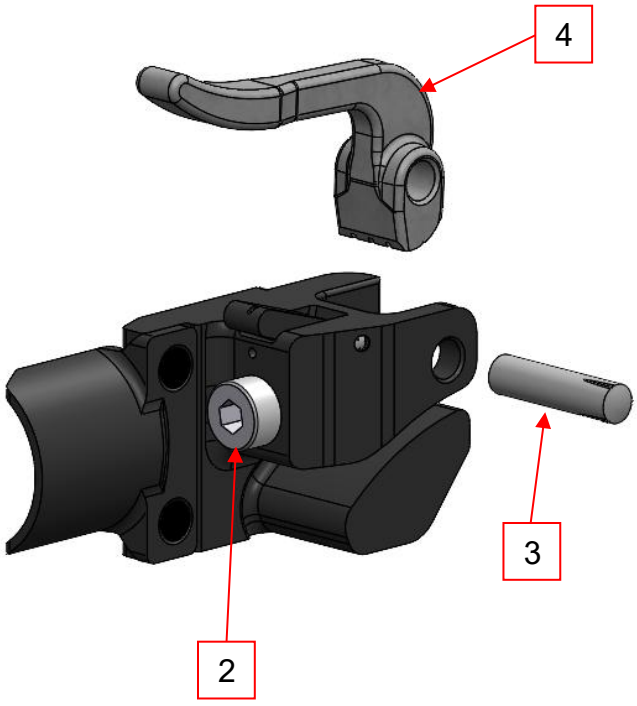

Figure 15

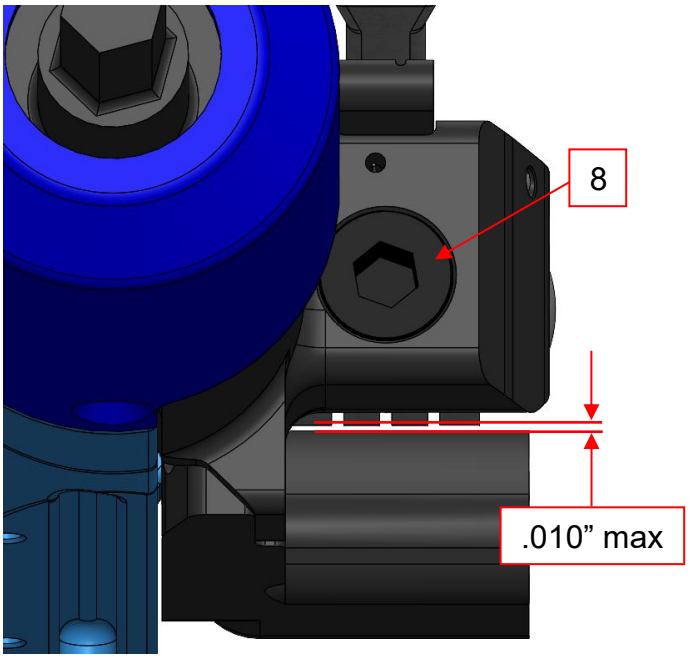

Figure 16

© Copyright
BAND-IT IDEX, Inc. 2025
All Rights Reserved

UES Promura | +61 3 9547 5833 | sales@uespromura.com.au
10-12 McWilliam Street, Springvale VIC 3171 | uespromura.com.au
Distributor reference copy. Technical / issuer particulars retained; contact links localised.

5. Limiter Actuator Service
    1. If rear disconnect was engaged and user can not return tool to normal operation follow below steps
    2. Remove qty 2 M4 screws from limiter body
    3. Hold limiter body to frame while removing stability handle. Limiter body is spring loaded and may fall off when handle is removed, if not held in place
    4. Remove limiter body
    5. Realign mating splines between inner ring (red surfaces) and outer ring (green surfaces) so the 2 parts are fully engaged
    6. User may need to remove outer ring, manually rotate inner ring and drive limiter actuator forward to allow splines to mate
    7. Reverse steps **1** through **4** to reassemble
    8. Torque stability handle to hand tight and M4 bolts with medium strength thread locker to 25 in-lb (3 Nm)

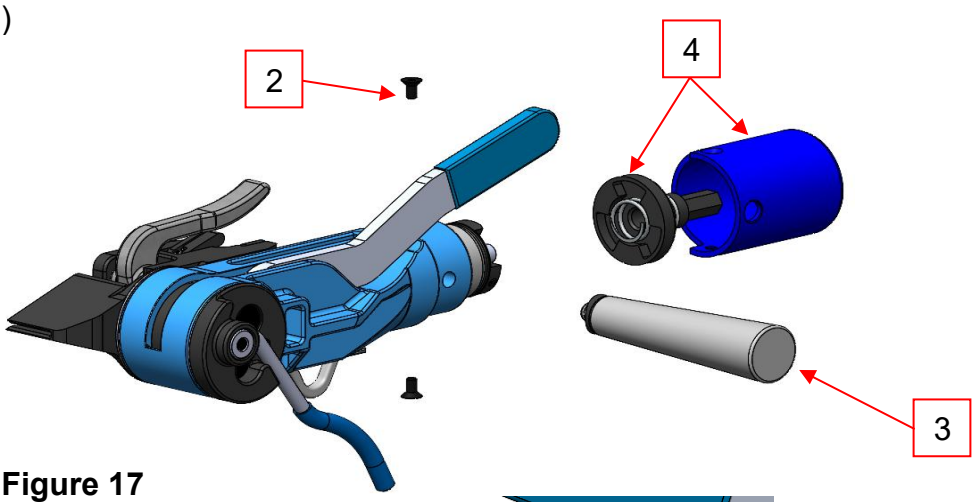

Figure 17

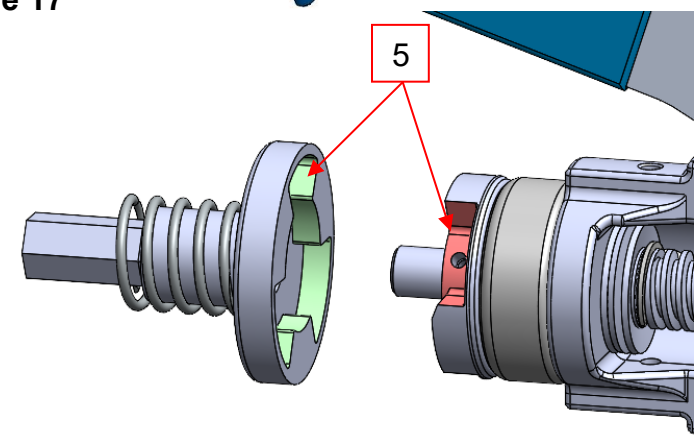

Figure 18

© Copyright
BAND-IT IDEX, Inc. 2025
All Rights Reserved

UES Promura | +61 3 9547 5833 | sales@uespromura.com.au
10-12 McWilliam Street, Springvale VIC 3171 | uespromura.com.au
Distributor reference copy. Technical / issuer particulars retained; contact links localised.