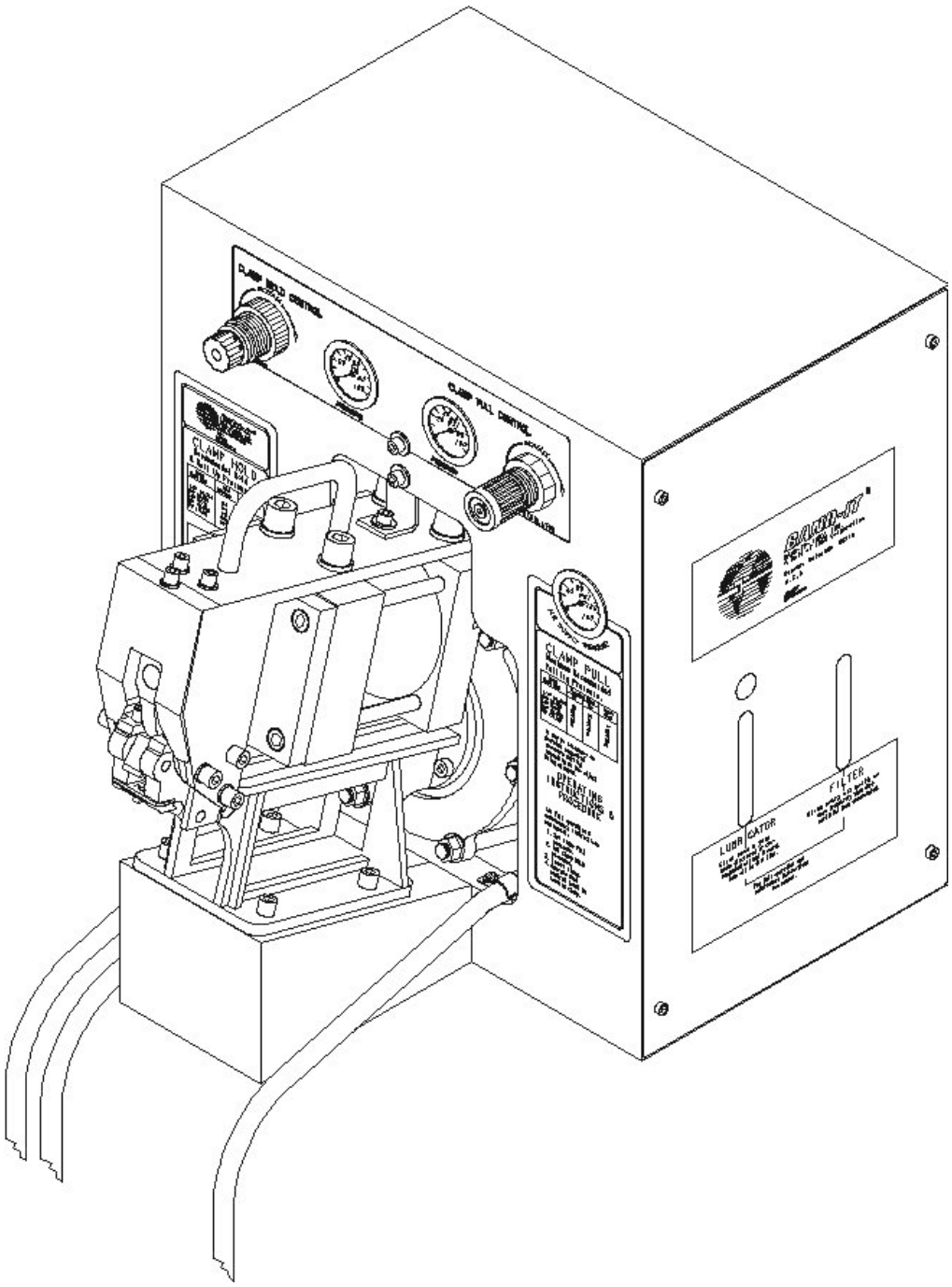

UES Promura
10-12 McWilliam Street
Springvale VIC 3171, Australia
+61 3 9547 5833
sales@uespromura.com.au

www.uespromura.com.au

Document # S41067 rev. H
© Copyright
BAND-IT-IDEX, Inc. 2010
All rights reserved

UES Promura | +61 3 9547 5833 | sales@uespromura.com.au
10-12 McWilliam Street, Springvale VIC 3171 | uespromura.com.au
Distributor reference copy. Technical / issuer particulars retained; contact links localised.

Table of Contents

Warranty and Safety Information	3
Front Tool Controls	4
Specifications	5
Installation	6-7
Operating Instructions	8-14
Maintenance Instructions	15-16
Maintenance Summary	17
Troubleshooting	18-21
Repair Parts	22-34

UES Promura
10-12 McWilliam Street
Springvale VIC 3171, Australia
+61 3 9547 5833
sales@uespromura.com.au

© Copyright
BAND-IT-IDEX, Inc. 2010
All rights reserved

UES Promura | +61 3 9547 5833 | sales@uespromura.com.au
10-12 McWilliam Street, Springvale VIC 3171 | uespromura.com.au
Distributor reference copy. Technical / issuer particulars retained; contact links localised.

Refer to website for warranty information: uespromura.com.au/document-support/

SAFETY RULES:

When applying clamps, care should be taken to make certain that fingers are not in the way of the clamp being applied. Tensioning the clamp can be stopped immediately by releasing the foot pedal. Detailed instructions are in this manual and the operator is advised to read it and become familiar with operating the tool.

IMPORTANT: When clamping a hose end, remember that a tighter clamp keeps the fitting more secure, but excess tension could damage the hose. Fitting stem must have prominent barbs for proper retention inside the hose, but must not be sharp to prevent cutting into the hose. Hose, fitting and clamp must be compatible with each other and the environment used in. If in doubt, consult the hose or fitting manufacturer or call BAND-IT.

Clamping objects other than hose requires similar precautions.

CAUTION: Improperly tightened clamps may result in dangerous hose assemblies, which could cause injuries or property damage.

CAUTION: Abuse or use of a hose outside the manufacturers recommended conditions may cause it to quickly deteriorate and become a safety hazard. This could result in serious injury or property damage. Inspect and test hose assemblies frequently.

UES Promura
10-12 McWilliam Street
Springvale VIC 3171, Australia
+61 3 9547 5833
sales@uespromura.com.au

© Copyright
BAND-IT-IDEX, Inc. 2010
All rights reserved

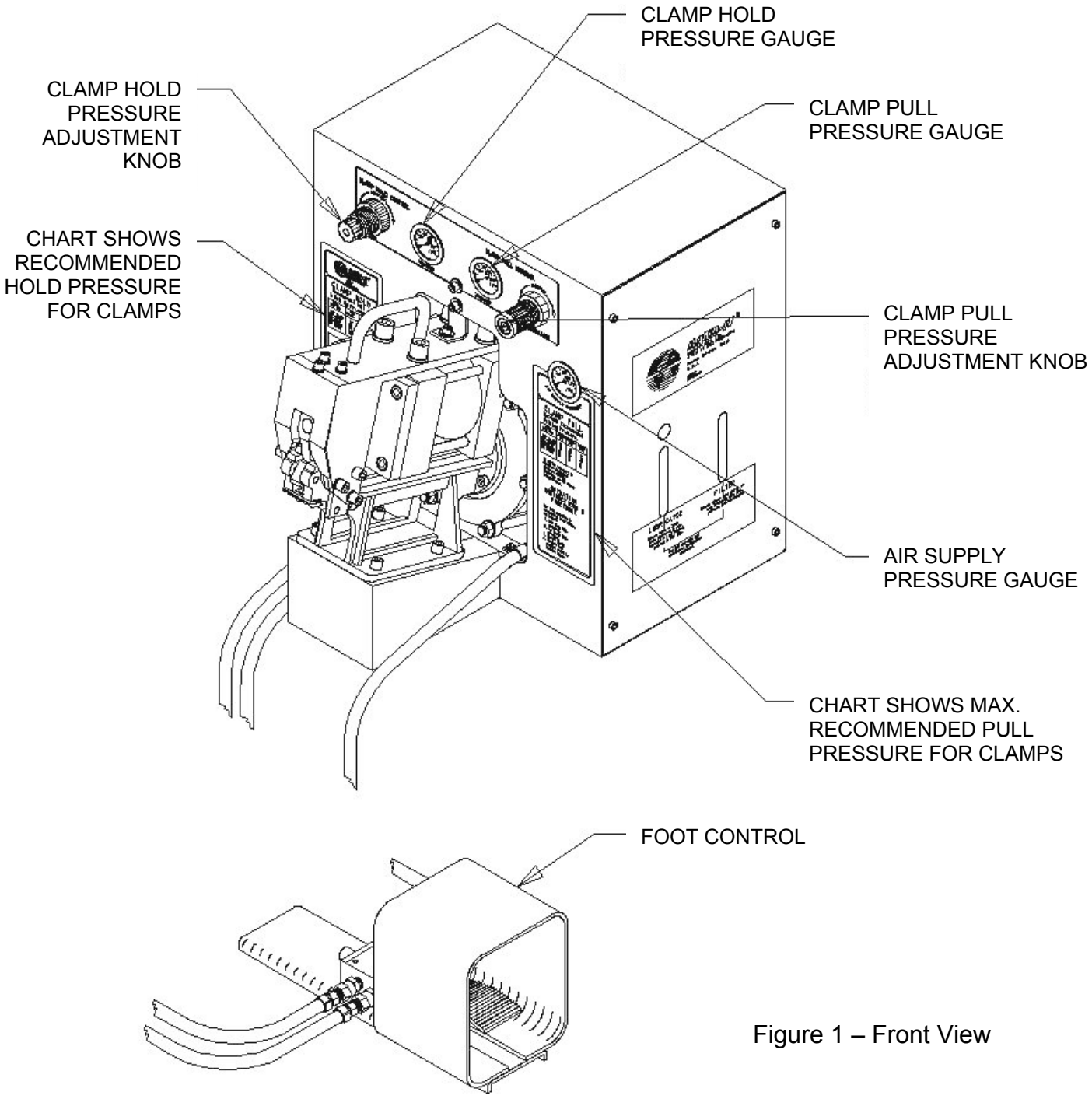

Figure 1 – Front View

UES Promura
10-12 McWilliam Street
Springvale VIC 3171, Australia
+61 3 9547 5833
sales@uespromura.com.au

Document # S41067 rev. H
© Copyright
BAND-IT-IDEX, Inc. 2010
All rights reserved

TOOL SIZE	
Width	17 Inches (431.8mm)
Height	18.5 Inches (469.9 mm)
Depth (over head)	21.5 Inches (546.1 mm)
Depth (chassis)	11 Inches (279.4 mm)
Weight	135 Lbs (61.2 kg)
TEMPERATURE	
Operating ambient	+32°F to +125°F (0°C to +51.5°C)
Storage temperature	-20°F to +160°F (-28.8°C to +71.1°C)
SUPPLY AIR	
Pressure	100-120 psi (7.0-8.4 kg/cm², 689-827 kPa)
Temperature	+32°F to +165°F (0°C to +73.8°C)
Consumption/cycle	6.7 cubic feet/minute @ 100 psig
Line size	minimum I.D. 3/8" (9.53 mm)
Connection size	1/4 npt .203" (5.156 mm) minimum I.D.
Filter in tool	50 micron sintered bronze
LUBRICANT	
Type	DTE 24 Hydraulic oil
Quantity	1/3 pint (.157 liter)
PERFORMANCE	
Control specifications	Foot operated valve with guard Guard meets OSHA part 1910. Sections 217 and 218, June 1974 Valve meets ANSI B11.1-1971
Water drain connection	Tube I.D. 1/8" (3.175 mm)
Cycle time	10 seconds
Pull-up clamp	3.5 seconds
Cut-off clamp	1.5 seconds
Eject tail and reset	1.0 seconds
CLAMP TYPE	
Tool with S260 head	Band-It Jr. and SID Junior Preformed
Width (inches)	1/4, 3/8, 1/2, 5/8, 3/4
Width (mm)	6.35, 9.53, 12.7, 15.88, 19.05
Diameter	3/4"-8" diameter
Materials	201/316 SS and galv. carbon steel

UES Promura
10-12 McWilliam Street
Springvale VIC 3171, Australia
+61 3 9547 5833
sales@uespromura.com.au

Document # S41067 rev. H
© Copyright
BAND-IT-IDEX, Inc. 2010
All rights reserved

UES Promura | +61 3 9547 5833 | sales@uespromura.com.au
10-12 McWilliam Street, Springvale VIC 3171 | uespromura.com.au
Distributor reference copy. Technical / issuer particulars retained; contact links localised.

UNPACKING:

1. Lift the outer tube of the packing box. Carefully examine the tool for shipping damage as evidenced by dents, loose parts, etc. Report any shipping damage found to the carrier that delivered the tool.
2. Lift out foot control valve and remove protective packing.
3. Remove the side panels (2) of the tool chassis. Keep the screws for reassembly. The tool is bolted to the bottom base of the shipping carton. Remove these screws.
4. Lift the tool using the hand hole at the rear top of the chassis and the handle on the tool head. Support the foot control valve and its lines to avoid damage while moving the tool.
5. The shipping carton has been specially prepared to protect the tool. It is recommended to keep the carton and hardware so the tool can be repacked in it, should it be desirable to ship the tool to another location or return it to the factory for service.
6. **CAUTION**: The tool weighs approximately 117 pounds. The aid of a suitable lifting device is recommended for handling the tool. Use the lift points provided. See figure 2.

MOUNTING:

1. Locate the tool in its desired location, and secure the tool to the mounting surface with 5/16" diameter bolts (4). Place the foot control valve on the floor. See figure 2 for location of the bolts.
2. A drain tube connected to the pipe connection on the bottom of the filter is supplied so the water, automatically ejected, can be dumped. This drain line can be connected to a permanent drain (recommended) or it can drain into a container. This line can be routed through the opening in the front of the chassis. If alternate routing of the hose is desired, an access hole must be cut through the chassis at the desired location.
3. Prepare the incoming air line, the supply air should be clean (filtered) and free of moisture. Recommended air source hook up should be done with a quick-disconnect coupling such as a Hansen 3000 series 1/4 npt socket and plug, or equivalent. For permanent hook up, use of a shut-off valve in the air line is recommended to enable shut-off of the incoming air when servicing the tool. Route the air line through the access hole in the rear of the chassis. Alternate routing of the supply air can be done through the bottom of the chassis. Connect the air line to the tee fitting in the inlet port of the filter. See figure 2.
4. Remove the filler plug of the lubricator, see figure 4, and fill the bowl to the fill line with the DTE 24 hydraulic oil supplied with the tool. Note: The lubricator cannot be filled while tool is pressurized.
5. Do not fill past the fill line on the bowl. Reattach filler plug. The tool is ready for preliminary operation. Do not reassemble the side panels. The lubricator must be checked for proper operation. Refer to the operating instructions section.

WARNING: This tool is intended for use with industrial compressed air systems. The tool must not be used where pressure or temperature may exceed the maximum rated operating condition as stated in the specifications section. The polycarbonate plastic bowls used in this tool could be damaged and possibly burst if exposed to strong alkali's, compressor oils containing aromatic hydrocarbons, synthetic oils, or fumes of these substances in contact with the polycarbonate plastic bowls, externally or internally.

UES Promura
10-12 McWilliam Street
Springvale VIC 3171, Australia
+61 3 9547 5833
sales@uespromura.com.au

Document # S41067 rev. H
© Copyright
BAND-IT-IDEX, Inc. 2010
All rights reserved

UES Promura | +61 3 9547 5833 | sales@uespromura.com.au
10-12 McWilliam Street, Springvale VIC 3171 | uespromura.com.au
Distributor reference copy. Technical / issuer particulars retained; contact links localised.

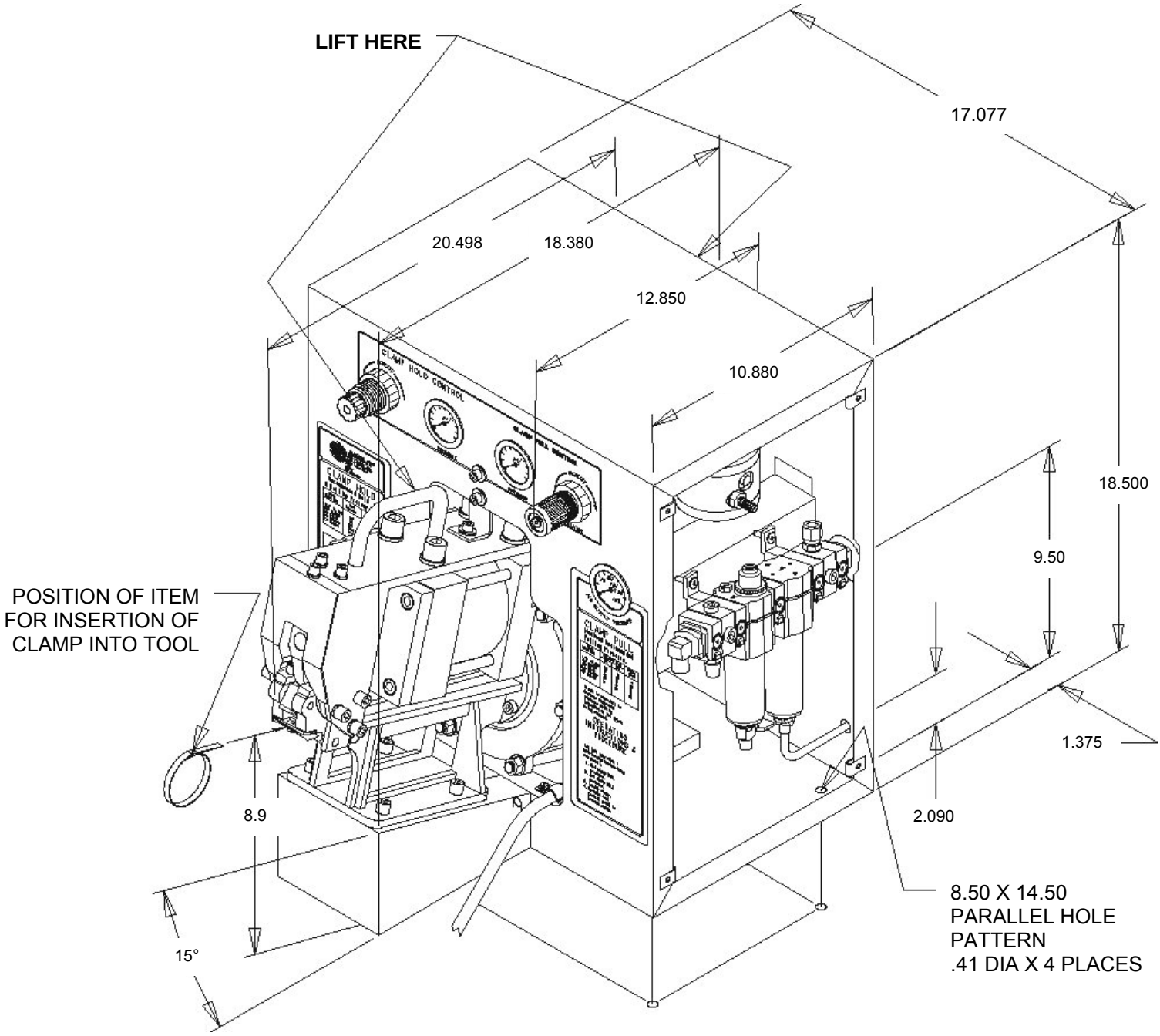

Figure 2 – Tool Overall Size

Document # S41067 rev. H
© Copyright
BAND-IT-IDEX, Inc. 2010
All rights reserved

PRELIMINARY

Read air supply pressure gauge (Fig. 1). Air pressure should not be lower than 100 psi and no higher than 120 psi. Depress the foot control valve pedal and hold the pedal down so the tool operates through its cycle. When the tool has completed the cycle, release the pedal and the tool will reset for the next cycle.

Cycle the tool three or four times without attempting to apply a clamp and observe the tool as it cycles to become familiar with the operating sounds and action of the tool. During these cycles, check the air lines for leaks and observe that the piston rods of the pull cylinder and cut-off cylinder operate freely.

CLAMP PULL PRESSURE GAUGE

Read the pressure shown on the clamp pull pressure gauge (Fig. 1) as the tool goes through the pull-up cycle. The pressure to be read is the pressure shown at the time the control valve shifts. Pressures shown on the gauge after the valve has shifted should be ignored.

CLAMP HOLD PRESSURE GAUGE

Read the pressure shown on the clamp hold pressure gauge (Fig. 1) as the tool goes through that portion of the cycle. The pressures observed are those to which the tool is set to operate. The pressure to be read is the pressure shown at the time the cut-off cylinder operates the cam to lock the clamp and to cut-off clamp tail. Pressures shown on gauge at other times during the cycle are unimportant and should be ignored. The cycle time, clamp pull pressure and clamp hold pressure should always be checked as described prior to attempting to apply a clamp on an item.

ADJUSTMENT OF LUBRICATOR

The lubricator adjustment must be checked to determine that the drip rate is one drip per cycle (set and locked at Band-It, does not need to be adjusted). Locate the drop rate adjustment knob on the top of the lubricator (Fig. 4). The drip rate adjustment should be made only when there is a constant flow of air through the lubricator (operate the tool).

Locate the sight dome just below the adjustment knob and observing the oil as it drips downward into the lubricator. To adjust the drip rate, turn the slotted red rotator in sight feed dome counter-clockwise to increase drip rate: clockwise to decrease the drip rate. When the proper rate of one drop per cycle is obtained, stop adjustment. Do not operate the tool at a higher drip rate than recommended as the larger amount of lubricant could adversely affect the operation of the time-delay valves and also result in accumulation of lubricant near the air exhaust.

Operation at a lower drip rate can starve the cylinders and valves and reduce their life due to premature wear.

UES Promura
10-12 McWilliam Street
Springvale VIC 3171, Australia
+61 3 9547 5833
sales@uespromura.com.au

Document # S41067 rev. H
© Copyright
BAND-IT-IDEX, Inc. 2010
All rights reserved

UES Promura | +61 3 9547 5833 | sales@uespromura.com.au
10-12 McWilliam Street, Springvale VIC 3171 | uespromura.com.au
Distributor reference copy. Technical / issuer particulars retained; contact links localised.

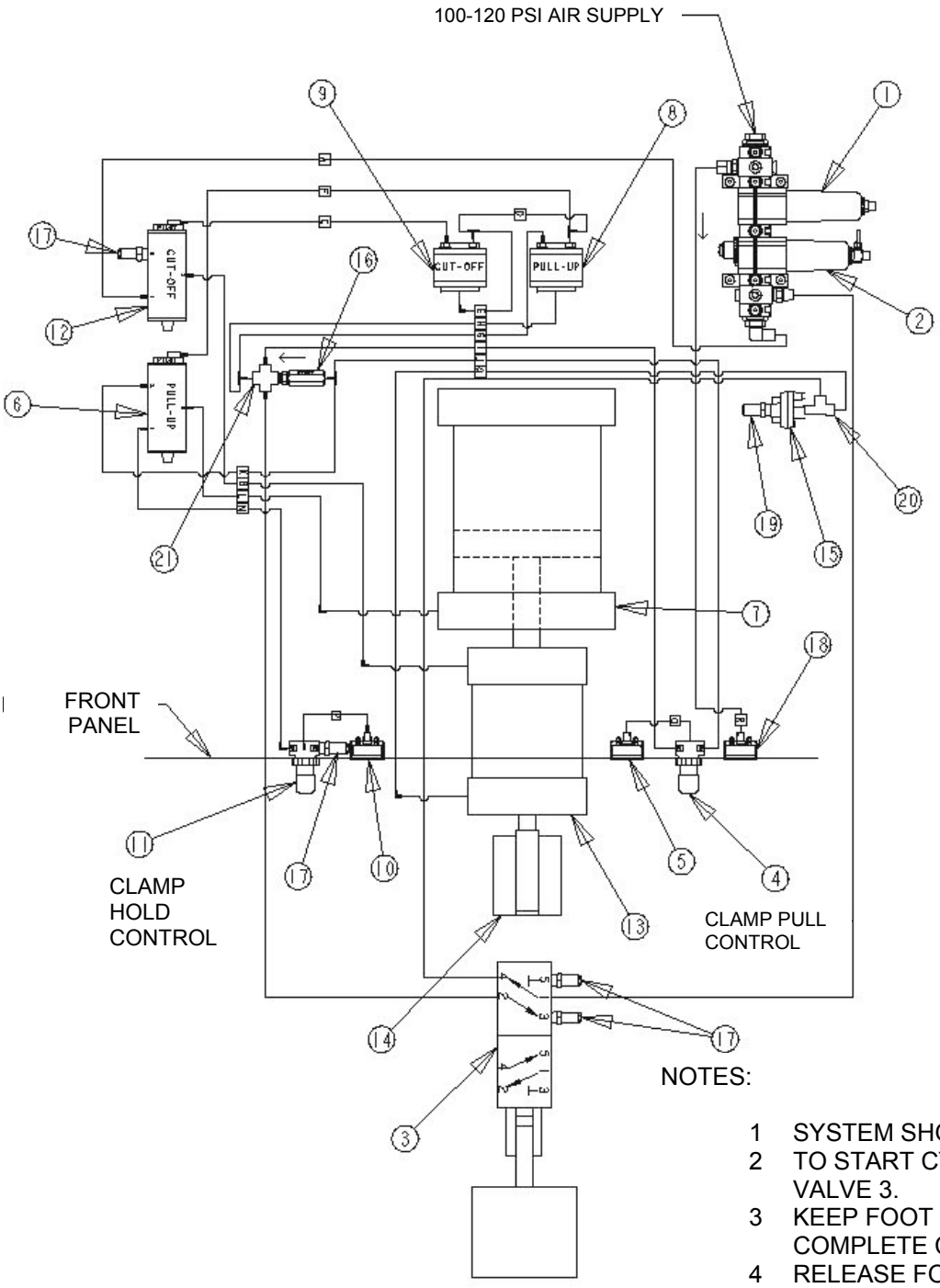

Figure 3 – Air Control Schematic

LEGEND:

1 FILTER, AIR
2 LUBRICATOR
3 VALVE, FOOT OPERATED
4 VALVE, CLAMP PULL PRESSURE CONTROL
5 GAUGE, CLAMP PULL PRESSURE
6 VALVE, PULL-UP CYLINDER
7 CYLINDER, CLAMP PULL
8 VALVE, TIME DELAYED, PULL-UP CYLINDER
9 VALVE, TIME DELAYED, CUT-OFF
10 GAUGE, CLAMP HOLD PRESSURE
11 VALVE, CLMAP HOLD PRESSURE CONTROL
12 VALVE, CUT-OFF CYLINDER
13 CYLINDER, CLAMP LOCK AND CUT-OFF
14 HEAD, CLAMP
15 VALVE, QUICK EXHAUST
16 VALVE, CHECK
17 MUFFLER, AIR EXHAUST
18 GAUGE, AIR SUPPLY PRESSURE
19 MUFFLER, AIR EXHAUST 1/4
20 TEE, STREET 1/4-18 NPT
21 CROSS, BRASS, 1/4 NPTF, FEMALE

▲ ON TOOLS SERIAL NUMBER 168 AND UP

NOTES:

1 SYSTEM SHOWN IN NORMAL (OFF) POSITION.
2 TO START CYCLE, DEPRESS FOOT CONTROL VALVE 3.
3 KEEP FOOT CONTOL VALVE DEPRESSED TO COMPLETE CYCLE.
4 RELEASE FOOT CONTROL VALVE WHEN THE COMPLETE CYCLE IS DONE OR TO STOP THE TOOL DURING ITS CYCLE.
5 ☐ REFERS TO IDENTIFICATION LETTERS PLACED ON EACH AIR LINE.

UES Promura
10-12 McWilliam Street
Springvale VIC 3171, Australia
+61 3 9547 5833
sales@uespromura.com.au

Document # S41067 rev. H
© Copyright
BAND-IT-IDEX, Inc. 2010
All rights reserved

UES Promura | +61 3 9547 5833 | sales@uespromura.com.au
10-12 McWilliam Street, Springvale VIC 3171 | uespromura.com.au
Distributor reference copy. Technical / issuer particulars retained; contact links localised.

ADJUSTMENT OF CYCLE TIME

The cycle time consists of two adjustable time elements. These can be adjusted as desired to: match the operator's skill, compensate for the difficulty of the assembly of the item being clamped, increase or decrease the speed of the tool to allow the tool to tension the clamp, etc. A six second time for a complete tool cycle is recommended as a reasonable time to make clamp assemblies, avoid operator fatigue, and obtain a good production rate. The total time to apply a clamp will be increased by the time to load the clamp on the item being clamped into the tool and removing the item and the spent tail after clamping. It is not likely that the cycle time will need be adjusted frequently.

ADJUSTMENT OF CLAMP PULL TIME

This is the time needed to allow the pull cylinder to tighten the clamp and to build air pressure to the pressure level selected. Pulling clamps with less than 40 psi does not require as much time to tension the clamp so, if desired, the tool cycle time can be shortened. Conversely, if the tool is used for clamps requiring pull pressure of 40 psi, or greater, the cycle time will need to be longer. To adjust this time, remove the right side panel (4 screws) and locate the time delay valve (Fig. 4). Locate the knurled adjustment knob (secured with a lock nut). Loosen the lock nut with a wrench and turn the screw clockwise (right hand) to increase the cycle time, turn the screw counter-clockwise (left hand) to decrease the cycle time. After an adjustment, it is recommended to cycle the tool a few times to check the time to which the tool has been reset. When satisfied with the time, tighten the lock nut to secure the adjustment knob and reassemble the side panel. A reasonable elapsed time for this portion of the cycle is three seconds.

ADJUSTMENT OF CLAMP LOCKING AND CUT-OFF TIME

This is the time required to reduce the pressure in the pull cylinder to the clamp holding pressure and to actuate the cut-off cylinder which locks the clamp and cuts off the clamp tail. For tools equipped with the Band-It Jr. preformed clamp head, the operator must have time to roll the clamp up to position for cut-off. Time required for roll up is dependent upon operator skill, familiarity with the tool, weight and size of the item being clamped. To adjust this cycle time, remove the left side panel (four screws) and locate the time control valve (Fig. 5). Locate the knurled adjustment knob (secured with a lock nut). Loosen the lock nut with a wrench and turn the screw clockwise to increase the cycle time, counter-clockwise to decrease the cycle time. Cycle the tool a few times to make certain the cycle time is changed to that desired. Tighten the lock nut to secure the adjustment knob and reassemble the side panel.

UES Promura
10-12 McWilliam Street
Springvale VIC 3171, Australia
+61 3 9547 5833
sales@uespromura.com.au

© Copyright
BAND-IT-IDEX, Inc. 2010
All rights reserved

UES Promura | +61 3 9547 5833 | sales@uespromura.com.au
10-12 McWilliam Street, Springvale VIC 3171 | uespromura.com.au
Distributor reference copy. Technical / issuer particulars retained; contact links localised.

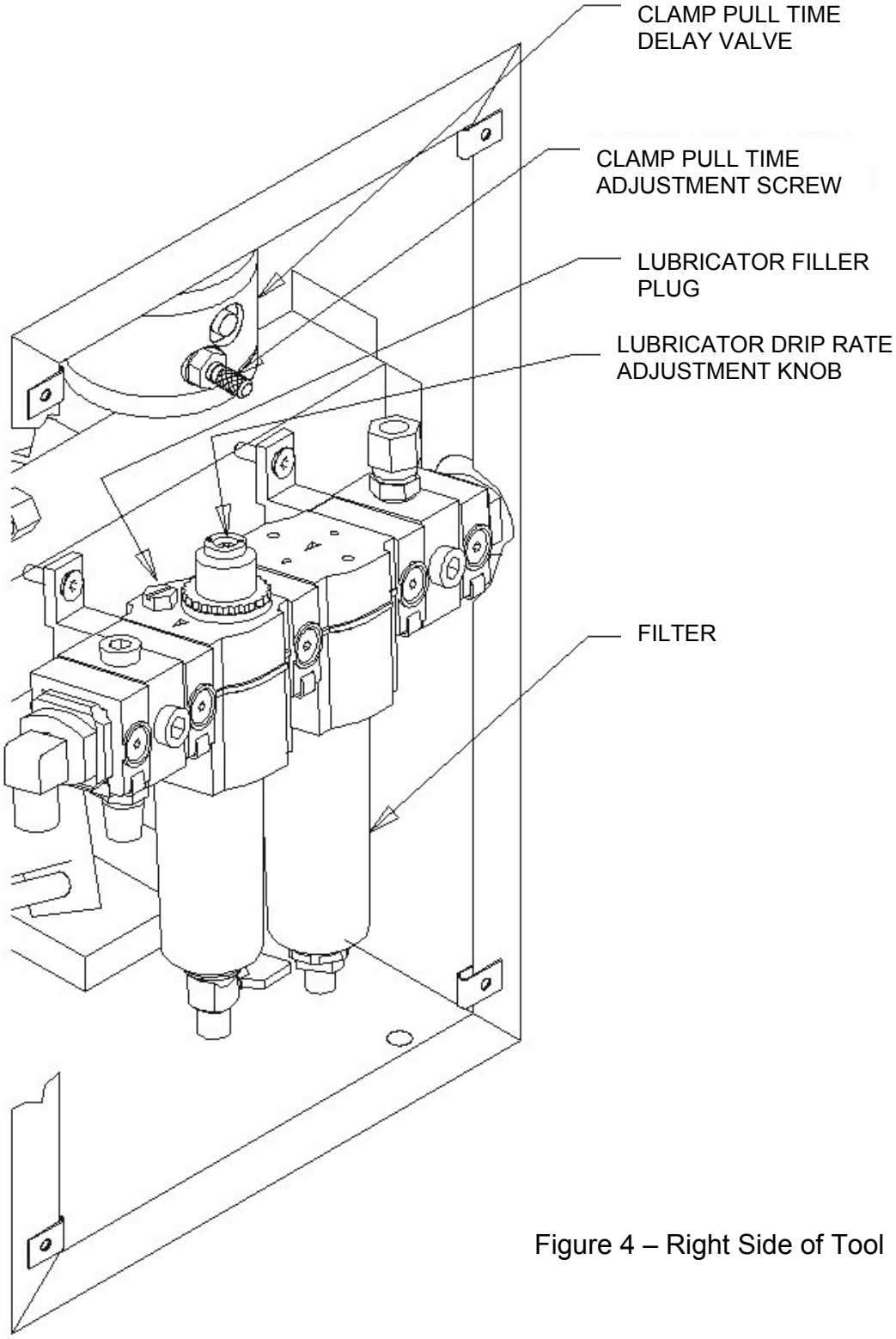

Figure 4 – Right Side of Tool

UES Promura
10-12 McWilliam Street
Springvale VIC 3171, Australia
+61 3 9547 5833
sales@uespromura.com.au

© Copyright
BAND-IT-IDEX, Inc. 2010
All rights reserved

UES Promura | +61 3 9547 5833 | sales@uespromura.com.au
10-12 McWilliam Street, Springvale VIC 3171 | uespromura.com.au
Distributor reference copy. Technical / issuer particulars retained; contact links localised.

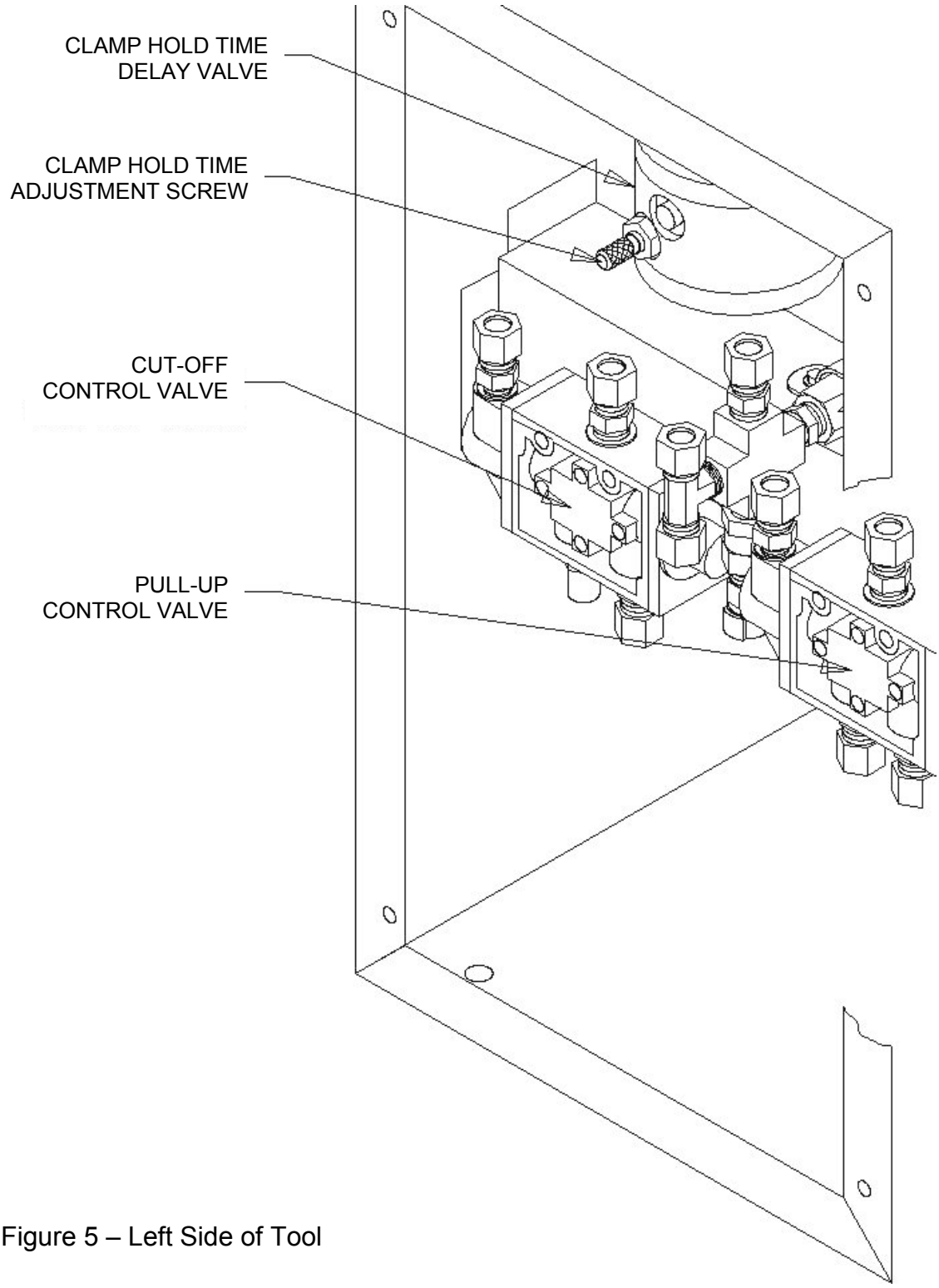

Figure 5 – Left Side of Tool

© Copyright
BAND-IT-IDEX, Inc. 2010
All rights reserved

Distributor reference copy. Technical / issuer particulars retained; contact links localised.

ADJUSTMENT OF CLAMP PULL PRESSURE

This adjustment will be required for different materials and construction of the items being clamped. A convenient chart summarizing the maximum pressures to use for the most commonly used Band-It clamps is located on the lower right front panel (Fig. 1). Note that this chart shows the maximum pressure to be used. Pulling clamps to pressures higher than recommended may result in clamp breakage or improper clamp locking caused by excessive stretching of the clamp band. It is likely that a pressure setting slightly below this maximum will be satisfactory.

Some testing, by assembling clamps on a test specimen of the item being clamped, may be useful to determine the desirable pressure setting. To adjust the pressure, locate the clamp pull pressure knob (Fig. 1) on the front panel. Adjustment is made by a knurled knob secured with a lock ring. Pull the lock ring out toward the knob so it can be turned. Turn the knob clockwise to increase the pressure setting; counter-clockwise to decrease the pressure setting. The pressure to which the tool is set is shown on the gauge beside the knob (Fig. 1). To check the pressure to which the tool is set, cycle the tool and observe the maximum pressure reading shown on the gauge when the piston is all the way in. Note that this pressure must be read during the pull cycle only. When the desired pressure is obtained, push the lock ring in and the knob is locked. Note: It is important to adjust so the pressure observed on the gauge is regulated to the desired pressure by the time the tool cycles and not attempt to set the pressure so that it is changing rapidly and merely "passing through" the desired pressure at the time the tool operates.

The latter condition can result in wide variations of pull pressure as the air pressure fluctuates.

ADJUSTMENT OF CLAMP HOLD PRESSURE

The pressure in the clamp pull cylinder must be reduced to allow the tool to lock the clamp after pulling and to satisfactorily cut off the clamp tail. This pressure is adjusted by the knurled knob on the left front panel (Fig. 1). The pressure to which the tool is set is shown on the gauge beside the knob (Fig. 1). Note that during this cycle, the pressure drops rapidly. The tool must be set so the desired pressure is shown at the instant the cut-off cylinder moves the cam out to lock the clamp and cut off the tail. To adjust this pressure, pull the lock ring out and turn the knob clockwise to increase the pressure; counter-clockwise to decrease the pressure.

A convenient chart summarizing the recommended pressures to use for the most common sizes of Band-It clamps is located on the lower left front panel. Note that this chart shows only recommended pressure settings; operation outside these pressure settings will possibly result in poor locks on the clamps, breaking of the clamp band (pressure too high), or difficulty in cutting off the tail (pressure too low). The tool should be cycled to check the pressure setting of the tool. When satisfactory, push the lock ring in to secure the adjustment knob. Note: It is important that the pressure be adjusted so the pressure is regulated to the desired holding pressure at the time the cut-off cylinder actuates and not attempt to adjust the tool so the pressure is changing rapidly at the time the cylinder actuates. This will result in consistent holding pressures.

The tool is ready for Band-It Jr. clamps.

UES Promura
10-12 McWilliam Street
Springvale VIC 3171, Australia
+61 3 9547 5833
sales@uespromura.com.au

Document # S41067 rev. H
© Copyright
BAND-IT-IDEX, Inc. 2010
All rights reserved

UES Promura | +61 3 9547 5833 | sales@uespromura.com.au
10-12 McWilliam Street, Springvale VIC 3171 | uespromura.com.au
Distributor reference copy. Technical / issuer particulars retained; contact links localised.

APPLYING CLAMPS

The following step-by-step instructions should be followed to successfully tension and lock a clamp. This information is also summarized on a decal located on the lower left front panel and explained in further detail in other sections of this manual.

CAUTION! When operating, do not place fingers near or between the clamp band and the item being clamped as they could be pinched.

1. Set and/or check clamp pull pressure.
2. Slide clamp over object being clamped. Insert tail of clamp into the open slot of the backing plate of the clamp tool head. Push the clamp tail into the head as far as possible (the clamp buckle should be almost touching the backing plate of the clamp tool head).
3. Support the item being clamped. The operator should hold the object so the clamp buckle is essentially level with the tail and should also keep the object horizontal and lift it if necessary as the weight of the assembly is not held by the clamp.
4. Depress the pedal of the foot control valve and hold the pedal down as the tool operates through its cycle.
5. Allow the tool to tighten the clamp and observe the pull pressure. The tool will then automatically cycle and lower the pressure in the pull cylinder to the hold pressure.
6. Roll up hose when clamp hold gauge drops to approximate roll up pressure shown in chart below. Rotate object being clamped upward and position clamp buckle under shear hook of machine.
7. Support the object being clamped as the cut-off cylinder automatically pushes the cam outward to perform and cut-off operation.

Clamp Width (mm)	Pull-Up Pressure (psi)			Hold Pressure (psi)	Roll Up Pressure (psi)
	Stainless Steel		Carbon Steel		
	201 SS	316 SS			
1/4" (6.35)	15	15	-	6-7	9-10
3/8" (9.525)	25	20	25	6-7	9-10
1/2" (12.7)	40	35	40	8-9	11-12
5/8" (15.875)	50	40	50	9-10	12-14
3/4" (19.05)	60	50	60	10-12	13-16

STOPPING THE TOOL

Should the occasion arise that the tool operation must be stopped to clear a jammed clamp, the tool cycle can be stopped by releasing the foot control valve and the tool will reset itself. Should the control valve again be depressed prior to allowing the tool to reset, erratic cycling will result.

UES Promura
10-12 McWilliam Street
Springvale VIC 3171, Australia
+61 3 9547 5833
sales@uespromura.com.au

Document # S41067 rev. H
© Copyright
BAND-IT-IDEX, Inc. 2010
All rights reserved

UES Promura | +61 3 9547 5833 | sales@uespromura.com.au
10-12 McWilliam Street, Springvale VIC 3171 | uespromura.com.au
Distributor reference copy. Technical / issuer particulars retained; contact links localised.

VALVES AND GAUGES
No periodic maintenance is required.

AIR LINES
No periodic maintenance is required. However, checking the tube connectors to see that they are tight when the tool is serviced is recommended.

FILTER
Clean the filter a minimum of every six months or more frequently if dirt particles are observed to be accumulating in the bowl.

LUBRICATOR
Drain and clean once a year or clean immediately if the lubricator is observed to be discolored or contaminated. Keep the oil level to the fill line. DO NOT over-fill since this reduces the efficiency of the lubricator. Discard the oil drained, do not reuse.

Warning: The lubricator should be refilled with DTE 24 hydraulic oil only. The use of other oils may cause damage to the system.

CLAMP TAIL GRIPPER PLATE
Remove the clamp tail gripper as shown in figure 6, and remove the right hand side panel. Depress the pedal of the fool control valve and allow the tool to cycle as though it was pulling a clamp. When the piston rod is pulled all the way back, disconnect or shut off the air supply. The tool will stop its action and the plate can be reached at the end of the piston rod. Slide tripper plate out of the piston rod. Clean to remove any accumulation of dirt, debris, etc. and apply molybdenum disulfide lubricant such as Molykote type G-n or equivalent to the edges of the plate. Reassemble the plate with chamfered edge up and toward the front of the tool. Slide the plate all the way into the piston rod. Reconnect or turn on the air. The tool will complete the cycle and return the piston rod toward the front of the tool. Reassemble the clamp tail gripper and the tool is ready to use.

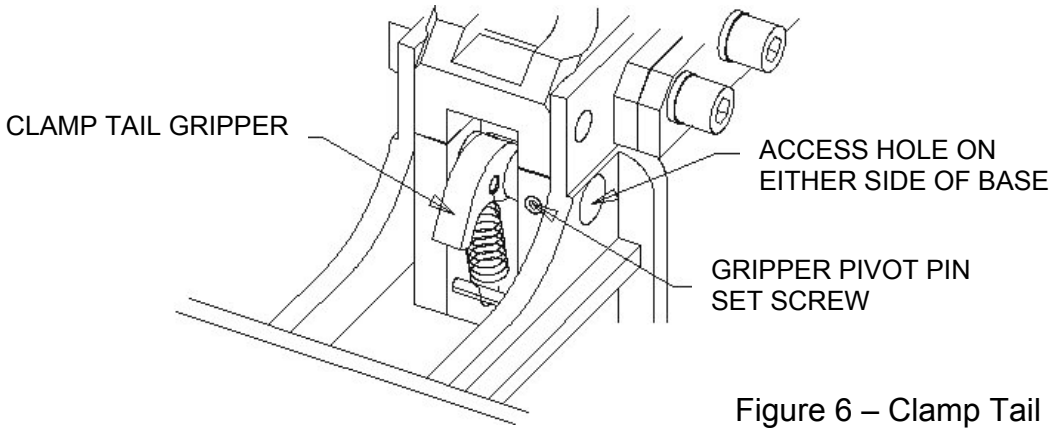

Figure 6 – Clamp Tail Gripper

© Copyright
BAND-IT-IDEX, Inc. 2010
All rights reserved

UES Promura | +61 3 9547 5833 | sales@uespromura.com.au
10-12 McWilliam Street, Springvale VIC 3171 | uespromura.com.au
Distributor reference copy. Technical / issuer particulars retained; contact links localised.

GENERAL
This tool has been designed and constructed to reduce minimum maintenance. Periodic checking of the tool to check for loose screws and fittings that may have loosened is necessary. A thorough check for air leaks, wear on the moving parts, etc. is recommended to keep the tool in peak operating condition.

AIR EXHAUST MUFFLERS
Remove and clean once a year minimum with a degreaser (such as Gunk) to remove accumulated oil deposits.

CYLINDERS
These cylinders have seals to keep dirt from entering the cylinders but the dirt accumulated at the seals should be cleaned away a minimum of once a year (more often if used in a very dirty area).

CLAMP TAIL GRIPPER
To remove gripper, loosen set screw in bottom of piston rod head (Figure 6) and tap gripper pivot pin through access holes in base and remove pin, slide gripper lever off spring loop.
Remove accumulated dirt and debris from the recesses or the teeth with a pointed object or knife blade. This should be done frequently when pulling plated carbon clamps. Apply Molykote type G-n or equivalent lubricant to the pivot pin.

JR. CLAMP HEAD
Keep sliding surfaces or the cam and shear hook well lubricated with a thin film of molybdenum disulfide lubricant such as Molykote G-n lubricant or equivalent.

CUTTER BLADE/BACKING PLATE
Check daily to be certain these are tight. Frequently check both for chipped or broken edges and replace if these are found. Inspect the lower edge of the cutter blade for sharp edges. If a sharp edge is found, use a fine grained sharpening or honing stone and lightly stone the lower edges to a smooth radius (Figure 7).

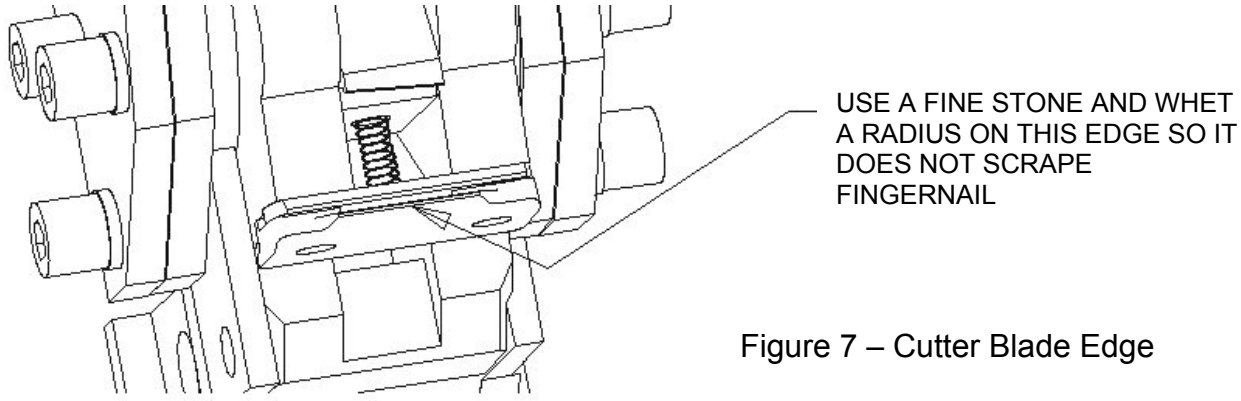

Figure 7 – Cutter Blade Edge

© Copyright
BAND-IT-IDEX, Inc. 2010
All rights reserved

Distributor reference copy. Technical / issuer particulars retained; contact links localised.

COMPONENT	FREQUENCY	CHECK	ACTION
Cutter Blade and Backing Plate	Daily	Check to see if blade is loose. Look for broken or chipped edge. Feel lower edge for sharp edge.	Tighten screws and replace if necessary. With stone, hone edge of cutter blade round (figure 7).
Clamp Tail Gripper	2,000 clamps pulled	Check for build up of foreign material in teeth.	Remove and clean with pointed object or knife blade.
Cam Contact Surface	2,000 clamps pulled	Observe surface for lubricant.	Lubricate with molybdenum disulfide grease such as Molykote G-n.
Filter	6 months	Check for accumulation of dirt.	Clean with soap and warm water.
Lubricator	2,000 clamps pulled	Check lubricant level. Observe for contaminated or discolored lubricant.	Refill to fill level with DTE 24 hydraulic oil. If needed, drain and clean lubricator with soap and warm water before refilling.
Air Exhaust Mufflers (5)	6 months	Look for build up of dirt.	Remove and clean with non-flammable degreaser such as Gunk.
Cylinders (2)	Yearly	Check for accumulation of dirt on piston rod cylinders.	Clean with soap and warm water.
Cam Roller	6 months	Clean surface of roller and wipe away excess lubricant.	Lubricate with SAE 30 oil.
Clamp Head	6 months	Check for loose mounting screws.	Tighten mounting screws.
Trip Plate	6 months	Clean to remove dirt, debris, etc.	Apply Molykote G-n or equivalent.

UES Promura
10-12 McWilliam Street
Springvale VIC 3171, Australia
+61 3 9547 5833
sales@uespromura.com.au

© Copyright
BAND-IT-IDEX, Inc. 2010
All rights reserved

GENERAL

This section contains information on problems that may possibly occur and the corrections to be made to restore the tool to proper operating condition. When using this clamp application tool, problems can occur with the tool or with the clamp being assembled. The guidelines shown and attention by the tool operator will result in identifying the problem so a timely correction can be made.

PROBLEM	OBSERVATION	CORRECTION
1) Clamp tail breaks during pull up.	- Knife-like edge on tail, edge of band on clamp is scarred and heavily scraped, deposits of metal on underside of tail at buckle edge. - Tail is broken at 45° angle and/or section thinned at break. - Tail breaks during pull-up.	- Cutter blade broken, replace. Cutter blade has sharp edge, remove sharp edge. - Pull up pressure set too high, reduce pressure. - Check hold pressure and reduce to recommended level. Roll up is being attempted before pressure has dropped below recommended PSI. Operator should wait for pressure to drop or decrease the holding cycle time (see operating instructions).
2) Clamp pulls satisfactorily but does not lock properly.	- Band-It Jr. lock is formed but pulls through buckle.	- Check hold pressure and reduce for maximum level recommended for clamp width and material - Clamp may have been rolled up at a higher pressure than recommended. Operator should wait for pressure to drop or decrease the holding cycle time (see operating instructions).
3) Foot control leakage.	- Air exhausts through exhaust port when tool is not being operated.	- Disconnect tubes L and B at cylinder end. Check each port for any air exhaust or faulty cylinder seals and repair.
4) Tool operation is erratic, especially when tool is resetting.	- Pull cylinder is jerky during return. - Tool makes stuttering noises as air exhausts from the cylinder(s).	- Check for debris under foot control valve pedal, or check to see that the valve is operated fully when pedal is depressed.

UES Promura
10-12 McWilliam Street
Springvale VIC 3171, Australia
+61 3 9547 5833
sales@uespromura.com.au

Document # S41067 rev. H
© Copyright
BAND-IT-IDEX, Inc. 2010
All rights reserved

UES Promura | +61 3 9547 5833 | sales@uespromura.com.au
10-12 McWilliam Street, Springvale VIC 3171 | uespromura.com.au
Distributor reference copy. Technical / issuer particulars retained; contact links localised.

PROBLEM	OBSERVATION	CORRECTION
5) Clamp pulls jerky. Clamp may or may not lock.	- Motion during pull up is erratic and sticky, but the edges of the band on the clamp are not scarred. -The object being clamped may be held in a twist while the clamp is being tightened. -The object being clamped is heavy or has downward pressure on it.	- Check clamp pull pressure and increase pressure if pull is below maximum recommended pressure. - Straighten/support the object and keep as level as possible. Lift the object or support it so the buckle is straight with the clamp tail. - Check to see if the band gripper pin has loosened and is dragging on the sides of the base. Relocate and tighten set screw if it is loose (fig. 6). - Pull up cylinder may need lubrication. Check the lubricator for oil and to see if the lubricator is working properly. Add oil and correct the setting and cycle the tool a number of times to lubricate the cylinder prior to resuming operation.
6) Clamp tail slipping in clamp tail gripper.	- Clamp pulls and locks satisfactorily but tail is sliding or scraping in clamp tail gripper.	- Remove the clamp tail gripper and clean the teeth. Observe for flattened teeth. If found, gripper should be replaced. Note that chipped teeth may hold band satisfactorily and use is not detrimental, but a replacement gripper should be ordered. - Tripper plate may be stuck due to dirt or lack of lubricant. Clean and relubricate the plate.
7) Clamp tail cannot be inserted into tool.	- Cycle tool and observe that the gripper lever tail moves as the piston rod returns to contact the clamp head.	- Gripper level not opening. Tripper plate may be broken or binding. Disassemble gripper lever and/or tripper plate and clean or replace defective item (fig. 6).
8) Clamp tail is crumpled or trapped as the tool resets.	- Tail is caught in the tool instead of being ejected back through or below the clamp head.	- Operate the tool and KEEP THE FOOT CONTROL VALVE PEDAL DEPRESSED. Reach under piston rod and locate the band gripper lever. Rotate the lever toward the clamp head and allow the tail to fall out of the tool. If the tail does not fall out, use pliers to grasp the clamp tail and remove it. Release foot control valve pedal. NEVER position your fingers anywhere but on the gripper lever and keep the foot control valve depressed.

UES Promura
10-12 McWilliam Street
Springvale VIC 3171, Australia
+61 3 9547 5833
sales@uespromura.com.au

Document # S41067 rev. H
© Copyright
BAND-IT-IDEX, Inc. 2010
All rights reserved

UES Promura | +61 3 9547 5833 | sales@uespromura.com.au
10-12 McWilliam Street, Springvale VIC 3171 | uespromura.com.au
Distributor reference copy. Technical / issuer particulars retained; contact links localised.

PROBLEM	OBSERVATION	CORRECTION
9) Tool doesn't cut off clamp.	- Cut-off cylinder stalls and does not cut off clamp tail. - Clamp tail bends and allows tool to force buckle past cutter blade edge.	- Check for loose or broken cutter blade. Tighten screws if loose. Replace cutter blade if broken. - Reset clamp hold pressure to recommended pressure. - If air line supply pressure is below 100 PSI, stop operation and correct or allow pressure to rise above 100 PSI. - Check cut-off cylinder air cushion valve (fig. 14). It might be screwed in too deep. - Cut-off cylinder piston seals leak. Loosen nut off of tube Q. If air is still escaping remove cylinder and replace seals. - Cut-off cylinder piston rod may be binding. Shut off air supply and remove tubes B and Q and operate piston rod by hand to see if it moves freely. If not, check back-up roller for .010" clearance or remove cylinder. - Lubricate between shear hook and cut-off cam.
10) Tool never reaches the selected pull pressure. Tool operation may be erratic in this portion of the cycle.	- Pressure observed increases, then drops rapidly and jumps back up to a higher pressure. - Tool cycles to start the clamp holding cycle before selected pressure is observed on gauge.	- Increase the clamp pull cycle time to allow the tool to regulate to the selected pressure. - Air line pressure may be lower than the selected pressure. Check and correct. - Check the system for an air leak.
11) Tool takes excessive time for clamp pull-up.	- Tool pulls the clamp and reaches the selected holding pressure, then the operator waits before the tool operates to the holding and cut-off cycle.	- Decrease the clamp pull cycle time (fig. 4).
12) Tool does not tighten clamps	- Selection of higher clamp pull pressure does not result in tighter clamps. Excessive amount of air is exhausting from the quick-exhaust valve.	- Check for air system leak. Tighten or replace defective items. - Pull cylinder seal may be leaking. Operate tool to stall the cylinder. Remove tube N and if air is escaping, disassemble pull cylinder and repair. - Check to see if gripper level pin is dragging on the base. Reposition and retighten the set screw that retains the pin (fig 6).

UES Promura
10-12 McWilliam Street
Springvale VIC 3171, Australia
+61 3 9547 5833
sales@uespromura.com.au

Document # S41067 rev. H
© Copyright
BAND-IT-IDEX, Inc. 2010
All rights reserved

UES Promura | +61 3 9547 5833 | sales@uespromura.com.au
10-12 McWilliam Street, Springvale VIC 3171 | uespromura.com.au
Distributor reference copy. Technical / issuer particulars retained; contact links localised.

PROBLEM	OBSERVATION	CORRECTION
13) Tool takes excessive time prior to actuation of cut-off cylinder.	- Tool reaches clamp hold pressure selected and operator must wait a second or more before cut-off cylinder actuates.	- Decrease the actuation time for the cut-off cylinder (fig. 5). - Time delay valve may be clogged. Remove needle valve and observe. If dirty, remove valve, disassemble and clean. - Cut-off valve may be sticking. Remove cut-off valve, disassemble and clean or replace (fig. 5).
14) Tool does not read clamp hold pressure selected.	- Cut-off cylinder actuates before the clamp hold pressure selected shows on the gauge. - Pressure drops below desired pressure and regulates at a lower pressure. - Pressure never regulates.	- Increase the actuation time for the cut-off cylinder. - Increase the clamp hold pressure. - Adjust valve. If no response, replace hold pressure valve.

UES Promura
10-12 McWilliam Street
Springvale VIC 3171, Australia
+61 3 9547 5833
sales@uespromura.com.au

Document # S41067 rev. H
© Copyright
BAND-IT-IDEX, Inc. 2010
All rights reserved

UES Promura | +61 3 9547 5833 | sales@uespromura.com.au
10-12 McWilliam Street, Springvale VIC 3171 | uespromura.com.au
Distributor reference copy. Technical / issuer particulars retained; contact links localised.

GENERAL

This tool is designed and manufactured to require minimal maintenance and to have a long life. However, certain parts may require periodic replacement due to normal wear. Replacement of these items will enable keeping the tool operating to its peak efficiency. The part lists shows all parts that may be required to repair the tool.

HOW TO ORDER REPAIR PARTS

This parts list is grouped into major sub-assembly sections of the tool. Components that also can be repaired are shown in their respective sections. Locate the part needed on the drawings and observe the number attached to it, match this number with "ITEM" on repair parts list. Order the parts using the six-digit part number and complete description shown on the repair parts list. Should a serial number be required, find the serial number of the tool on the nameplate located on the exterior of the front panel in the lower left-hand corner (Fig. 8). It is recommended that the serial number information be supplied on all repair part orders. Submit the order to your BAND-IT distributor or representative for processing. Note that some parts have part numbers marked on the parts, this information may be helpful in assuring that the correct part is ordered, but always consult the repair parts list and supply all the information as suggested in this section. It is recommended that items such as nuts, bolts, etc, be purchased locally.

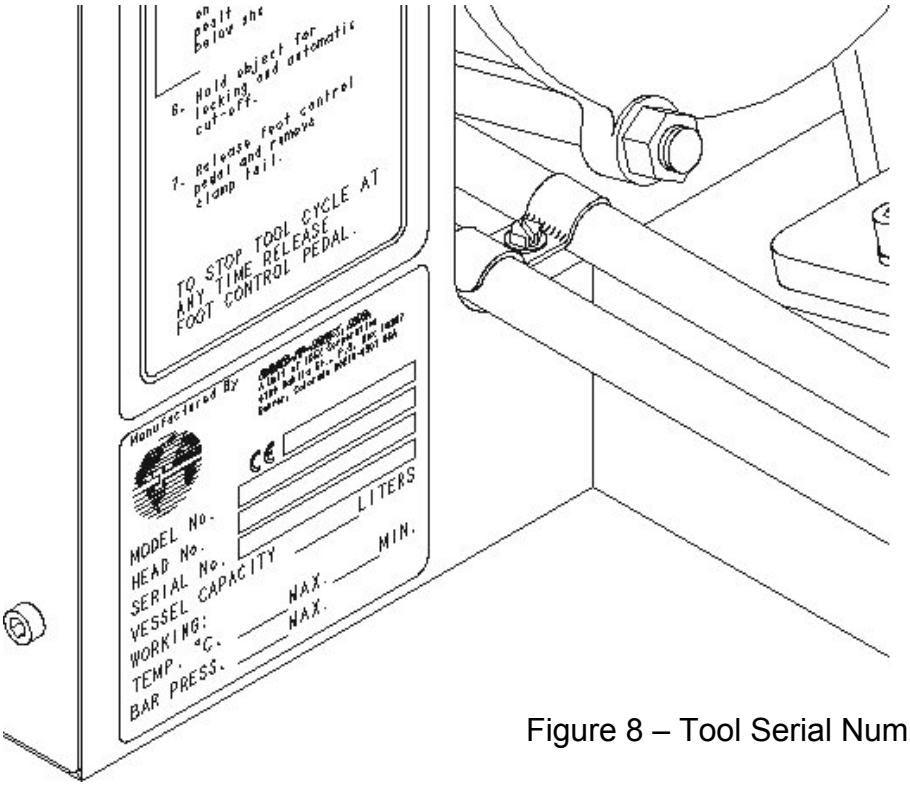

Figure 8 – Tool Serial Number Location

© Copyright
BAND-IT-IDEX, Inc. 2010
All rights reserved

Distributor reference copy. Technical / issuer particulars retained; contact links localised.

ITEM	PART NO.	QTY.	DESCRIPTION
1	S44479	1	HEAD ASSEMBLY, (FIG. 1)
2	S37889	1	CONTROL AIR ASSEMBLY, (FIG. 10)
3	S34787	1	CHASSIS, WELDED
4	S37987	1	BRACKET, BASE MOUNTING
5	S38087	1	BRACKET, L-TOP
6	S38277	1	DECAL, CLAMP HOLD AND PULL CONTROL
7	S38377	1	DECAL, CLAMP HOLD
8	S38477	1	DECAL, CLAMP PULL
9	S31788	1	DECAL, NAMEPLATE AND SERIAL NO.
10	S38587	1	CLIP, SINGLE HOSE
11	S38687	1	CLIP, SINGLE VALVE
12	S38787	1	CLIP, DOUBLE HOSE
13	H66088	2	SCREW, HEX HD, 1/4-20 X 1.00
14	S32687	4	SCREW, SOC HD, 1/4-20 X 1.75
15	S33787	4	SCREW, SOC HD, 1/4-20 X 2.50
16	J90987	8	SCREW, SOC HD, 5/16-18 X 0.88
17	S25087	3	SCREW, SOC HD, NYLON PATCH, 1/4-20 X 0.63
18	S32887	27	WASHER, FLAT, 0.22 ID X 0.63 OD X 0.06
19	S33987	8	WASHER, FLAT, 0.34 ID X 0.69 OD X 0.06
20	R00622	1	PAD, RUBBER, 2 X 5 X 0.75
21	S26387	11	WASHER, LOCK, 0.25
22	J66587	8	WASHER, LOCK, 0.31
23	A93087	4	SCREW, FLAT HD, SOC #10-32 X 0.75
24	S32787	10	NUT, HEX, 1/4-20
25	G92188	4	NUT, HEX, 5/16-18
26	S26587	4	LOCKNUT, NYLON INSERT #10-32 UNF
27	S27587	2	SCREW, SHEET METAL, #8
28			
29	S39079	1	PANEL, SIDE, SLOTTED
30	S36387	8	U-TAP CLIP, #10-24
31	S39087	1	PANEL, SIDE, PLAIN
32	P06486	2	DECAL, BAND-IT LOGO
33	J65387	8	SCREW, SOC. HD, NYLON PATCH, #10-24 X 0.50
34	S26079	1	HEAD ASSEMBLY, JR CLAMP, (FIG. 13)
35	S31589	1	LUBRICATING OIL AND BOTTLE ASSY (NOT SHOWN)
36	S41185	4	NUT, CLIP-ON, 5/16-18
37	S42487	1	DECAL, FILTER-LUBRICATOR

UES Promura
10-12 McWilliam Street
Springvale VIC 3171, Australia
+61 3 9547 5833
sales@uespromura.com.au

Document # S41067 rev. H
© Copyright
BAND-IT-IDEX, Inc. 2010
All rights reserved

UES Promura | +61 3 9547 5833 | sales@uespromura.com.au
10-12 McWilliam Street, Springvale VIC 3171 | uespromura.com.au
Distributor reference copy. Technical / issuer particulars retained; contact links localised.

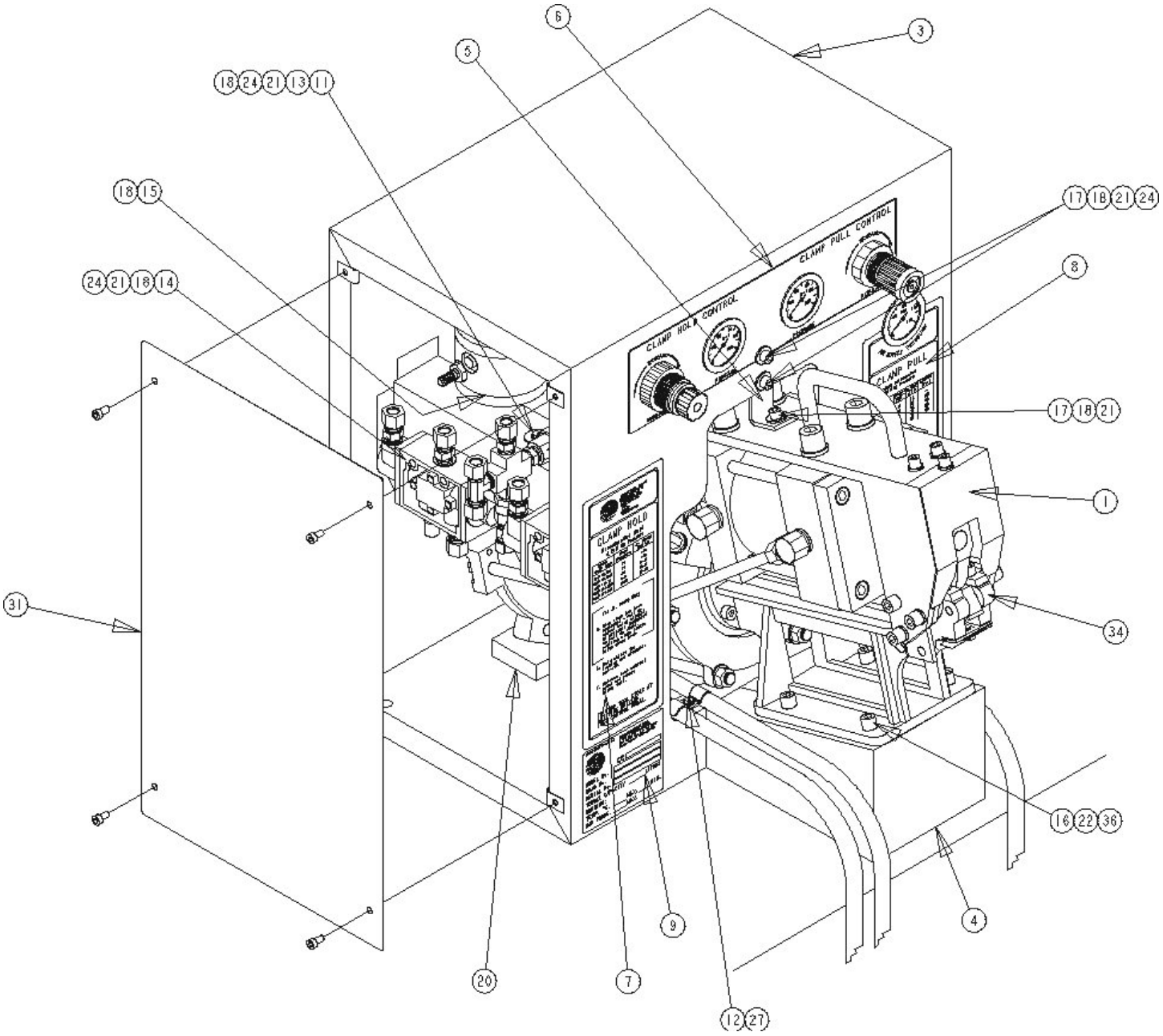

Figure 9 – Tool Assembly

Document # S41067 rev. H
© Copyright
BAND-IT-IDEX, Inc. 2010
All rights reserved

Distributor reference copy. Technical / issuer particulars retained; contact links localised.

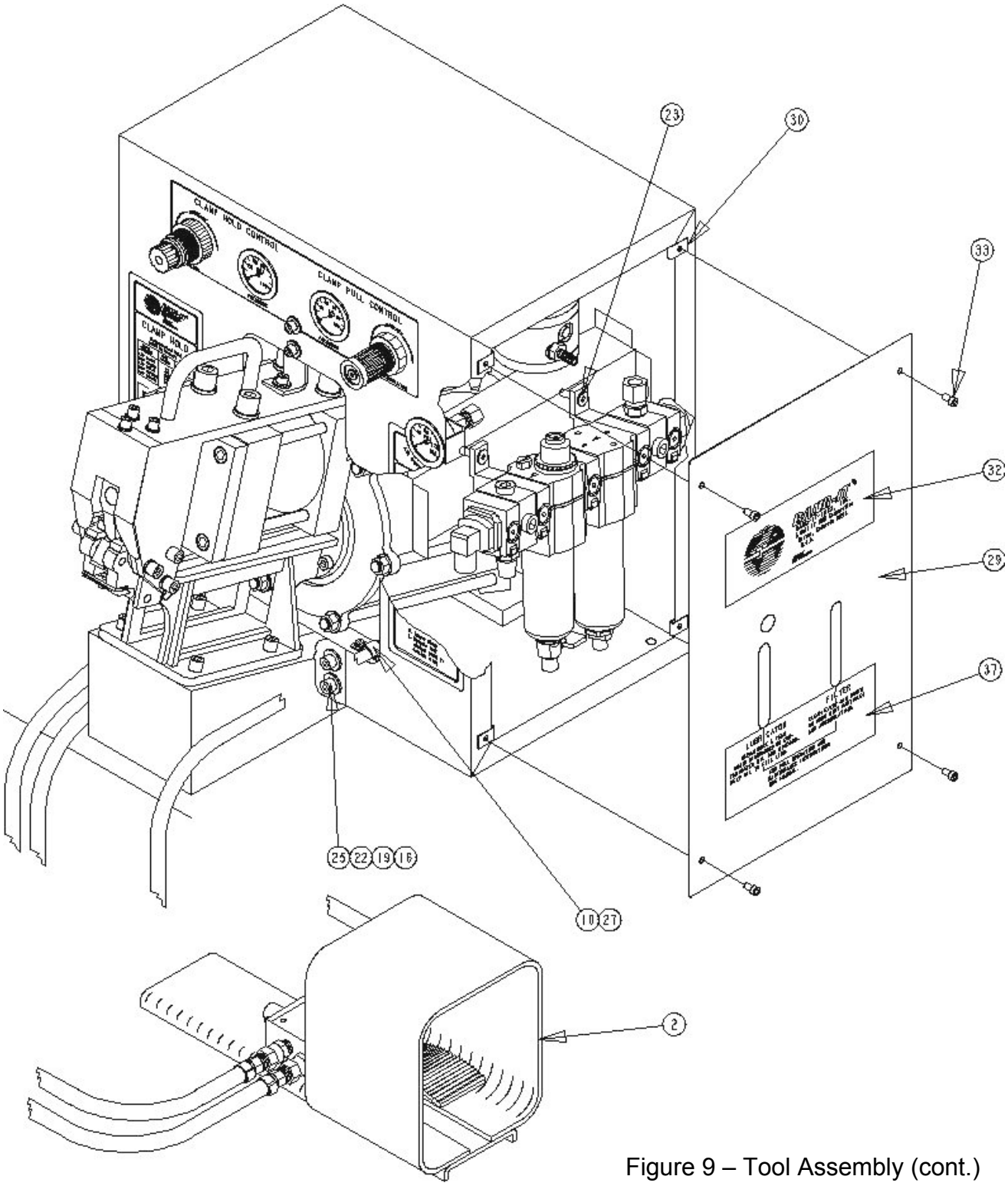

Figure 9 – Tool Assembly (cont.)

Document # S41067 rev. H
© Copyright
BAND-IT-IDEX, Inc. 2010
All rights reserved

Distributor reference copy. Technical / issuer particulars retained; contact links localised.

ITEM	PART NO.	QTY	DESCRIPTION
1	S31689	1	FILTER/LUBRICATOR ASSEMBLY
		1	*FILTER
		1	*LUBRICATOR
		2	*QUIKCLAMP WALL MOUNT
		3	*QUIKCLAMP
		2	*1/4" PIPE ADAPTOR
		2	*PORTING BLOCK
		4	*PLUG
2	S35587	1	VALVE, FOOT OPERATED
		1	*BODY KIT (SPOOL O-RINGS, BUMPERS, PILOT O-RINGS, MANIFOLD O-RINGS)
3	S35687	1	GUARD, FOOT
4	S28787	2	VALVE, TIME DELAY
		1	*SERVICE KIT (AIR CAP GASKET, VALVE HEAD GASKET, BLOCK REPACKING, ADJ SCREW O-RINGS, 2 END PLUG O-RINGS, 4 PISTON O-RINGS)
5	S35787	2	VALVE, AIR OPERATED
6	S35887	1	VALVE, PULL/TENSION REGULATOR
7	S10287	1	VALVE, HOLD TENSION RELIEF
8	S35987	2	NUT, RING PANEL MOUNT
9	S36087	1	VALVE, CHECK
10	S41799	1	QUICK EXHAUST VALVE AND MUFFLER KIT
11	S36287	2	GAUGE, PRESSURE, 0-100 PSI
12	S36487	3	CONNECTOR, FEMALE
13	S36587	2	CONNECTOR, MALE
14	S36687	9	CONNECTOR, MALE
15	S36787	2	ELBOW, MALE 90°
16	S36887	6	ELBOW, MALE 90°
17	S36987	1	ELBOW, MALE 90°
18	S37087	2	ELBOW, MALE 90°
19	S37187	1	TEE, MALE RUN
20	S37287	3	TEE, MALE BRANCH

ITEM	PART NO.	QTY	DESCRIPTION
21	S37387	2	NIPPLE, HEX
22			
23	S37587	1	CROSS, FITTING
24	S11787	4	MUFFLER AIR EXHAUST
26	S37689	3	HOSE ASSY., FOOT OPERATED VALVE
27	S30587	2	LETTER, TUBE I.D. (CARD W/ ALL LETTERS REQUIRED)
28	NSS**	1	TUBE "A" 3/8 OD X 28" LONG
29	NSS**	1	TUBE "B" 3/8 OD X 28" LONG
30	NSS**	1	TUBE "C" 3/8 OD X 15" LONG
31	NSS**	1	TUBE "D" 3/8 OD X 18" LONG
32	NSS**	1	TUBE "E" 3/8 OD X 12" LONG
33	NSS**	1	TUBE "F" 3/8 OD X 19" LONG
34	NSS**	1	TUBE "G" 3/8 OD X 19" LONG
35	NSS**	1	TUBE "H" 3/8 OD X 28" LONG
36	NSS**	1	TUBE "I" 3/8 OD X 19" LONG
37	NSS**	1	TUBE "J" 3/8 OD X 19" LONG
38	NSS**	1	TUBE "K" 3/8 OD X 15" LONG
39	NSS**	1	TUBE "L" 3/8 OD X 33" LONG
40	NSS**	1	TUBE "M" 3/8 OD X 33" LONG
41	NSS**	1	TUBE "O" 3/8 OD X 18" LONG
42	NSS**	1	TUBE "P" 3/8 OD X 18" LONG
43	NSS**	1	TUBE "Q" 3/8 OD X 10" LONG
44	NSS†	---	COMPOUND, TELFLON FIL. SEALANT
45	NSS‡	---	COMPOUND, MED. LOCKING (BLUE)
46	S37787**	1	TUBE, POLYETHYLENE 3/8 OD
47	S39687	1	TEE, MALE BRANCH, 1/4 NPT
48	S41987	1	GAUGE PRESSURE PANEL MOUNT
49	S40787	1	ASSEMBLY, DRAIN TUBE
50	NSS**	1	TUBE "R", 3/8 OD X 12" LONG
51	S25487	1	ELBOW, 90° STREET, 1/4 NPT
52	G00689	4	SWIVEL UNION, 1/4" M X F

* For replacement of these items and their component parts, purchase directly from the manufacturer or its distributor(s).

** Individual tubes do not have unique part numbers. These tubes may be cut to length shown from a bulk roll of tubing. The part number to be ordered is shown as item 46. Customers must order the number of feet desired. A 29-foot roll is required to replace all the tubing in one tool.

† Use Teflon filled sealant such as Loctite 592 or equivalent, manufactured by Loctite Corp., Newington, Connecticut, 06111. Purchase locally.

‡ Use a medium strength sealing compound such as Loctite 242 or equivalent, manufactured by Loctite Corp., Newington, Connecticut, 06111. Purchase locally.

NSS – Items not sold separately for repair.

UES Promura
10-12 McWilliam Street
Springvale VIC 3171, Australia
+61 3 9547 5833
sales@uespromura.com.au

Document # S41067 rev. H
© Copyright
BAND-IT-IDEX, Inc. 2010
All rights reserved

UES Promura | +61 3 9547 5833 | sales@uespromura.com.au
10-12 McWilliam Street, Springvale VIC 3171 | uespromura.com.au
Distributor reference copy. Technical / issuer particulars retained; contact links localised.

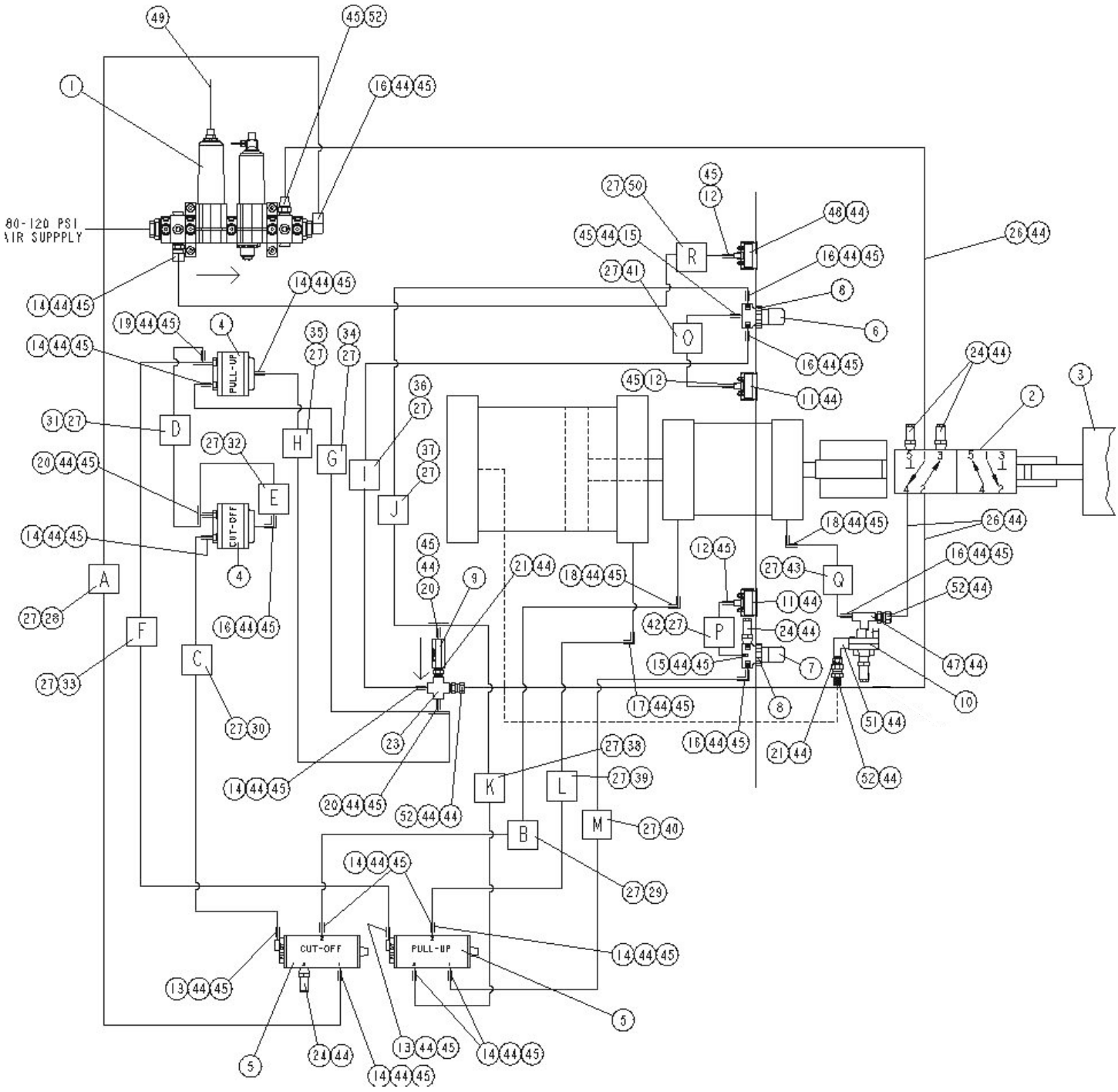

Figure 10 – Control Air System

© Copyright
BAND-IT-IDEX, Inc. 2010
All rights reserved

Distributor reference copy. Technical / issuer particulars retained; contact links localised.

ITEM	PART NO.	QTY	DESCRIPTION
1	S45479	1	CYLINDER ASSEMBLY, PULL-UP (SEE PULL-UP CYLINDER PARTS LIST)
2	S22687	1	SPACER, MOUNTING BRACKET
3	J66587	2	WASHER, LOCK, 5/16 I.D.
4	S24787	2	SCREW, CAP, SOC. HD, 5/16-18 X 3-1/2
5	S26287	4	WASHER, LOCK, 1/2 I.D.
6	S25287	4	SCREW, CAP, SOC HD, 1/2-13 X 1
7	S43687	1	BRACKET, MOUNTING, MACHINED
8	S22487	1	CYLINDER, CUT-OFF (SEE CUT-OFF CYLINDER PARTS LIST)
9	S52488	1	CAM, CUT-OFF
10	S22878	1	BLOCK, SUPPORT, CAM ROLLER
11	S43387	3	SCREW, CAP, SOC. HD, 1/4-20 X 1
12	S26387	3	WASHER, LOCK, 1/4 I.D.
13	S44187	1	COVER, FRONT
14	S23987	-	SHIM, CAM ROLLER (QTY MAY VARY)
15	S22787	1	ROLLER CAM
16	S22987	1	PIN, CAM ROLLER
17	NSS	*	LUBRICANT, MOLYBDENUM DISULFIDE
18	S34987	1	HANDLE, CARRYING
19	S18387	2	WASHER, LOCK, #10
20	J91587	2	WASHER, FLAT, 7/32 X 1/2 X 1/16
21	J64987	2	SCREW, CAP. SOC. HD, #10-32 X 3/4
22	S42987	-	SHIM, CAM ROLLER (QTY MAY VARY)

* Use a multi-purpose, heavy-duty lubricant paste such as Molykote G-n paste as manufactured by Dow Corning Corporation, Midland, Michigan 48640, or equivalent. Purchase locally.

NSS – Items not sold separately for repair.

UES Promura
10-12 McWilliam Street
Springvale VIC 3171, Australia
+61 3 9547 5833
sales@uespromura.com.au

© Copyright
BAND-IT-IDEX, Inc. 2010
All rights reserved

UES Promura | +61 3 9547 5833 | sales@uespromura.com.au
10-12 McWilliam Street, Springvale VIC 3171 | uespromura.com.au
Distributor reference copy. Technical / issuer particulars retained; contact links localised.

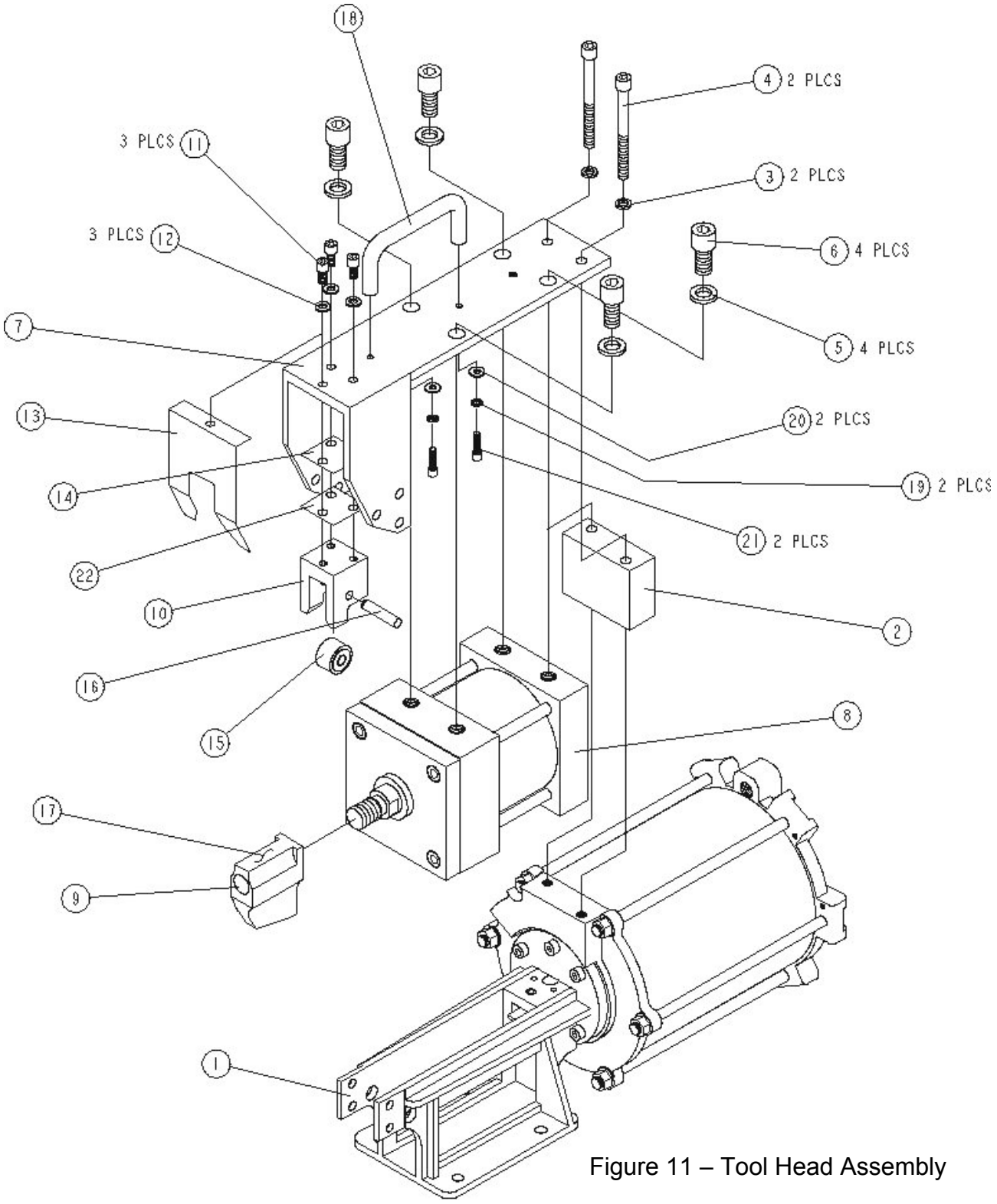

Figure 11 – Tool Head Assembly

Document # S41067 rev. H
© Copyright
BAND-IT-IDEX, Inc. 2010
All rights reserved

Distributor reference copy. Technical / issuer particulars retained; contact links localised.

ITEM	PART NO.	QTY	DESCRIPTION
1	J67687	12	NUT, HEX, 3/8-24
2	NSS	*	COMPOUND, HIGH STRENGTH (RED)
3	S47987	1	COVER ASSEMBLY, REAR CYLINDER
4	S44987	1	BOLT, HEX HD, 1/2-13 X 2-1/2
5**	S45587	1	O-RING, 1/2 DIA
6	S44687	1	PISTON, CYLINDER
7	J63287	1	O-RING, PISTON
8	J60787	1	TUBE, CYLINDER
9	J62187	6	BOLT, CYLINDER TIE
10	J63187	1	O-RING, PISTON ROD
11	S21877	1	HEAD, FRONT PULL-UP CYLINDER
12	J66687	2	GASKET, CYLINDER
13	S45687	1	WASHER, FLAT, 17/32 ID X 1-1/16 OD
14	J90987	6	SCREW, CAP. SOC. HD, 5/16-18 X 7/8
15	S45389	1	PISTON ROD ASSY (USES ITEMS 27 THRU 30)
16	S44887	1	SPACER, STROKE LIMITING

ITEM	PART NO.	QTY	DESCRIPTION
17	S21587	1	PIN, CLAMP TAIL GRIPPER
18	S45087	1	PLATE, CLAMP TAIL GRIPPER TRIP
19	S45186	1	GRIPPER, CLAMP TAIL
20	S21789	1	BASE, TOOL
21	S52687	1	SPRING, CLAMP TAIL GRIPPER RETURN
22	J64887	1	SCREW, SET, SOC HD, #10-32 X 3/16
23	NSS	†	LUBRICANT, MOLY PASTE
24	S44787	1	ROD, PISTON
25	NSS	††	COMPOUND, MEDUIM LOCKING, (BLUE)
26	NSS	†††	COMPOUND, GASKET AND SEALING (BOTH SIDES OF GASKET)
27	J66487	1	PIN, CLAMP TAIL GRIPPER BACKUP
28	J65487	1	SCREW, SET, SOC. HS, 5/16-24 X 3/8
29	J61187	1	PIN, 1/8 X 1 3/8 SPRING
30	J67287	1	SCREW, CAP. SOC. HD. 1/4-28 X 1/2
31	J61967	1	PLATE, ROD GUIDE
32	S69587	2	SCREW, BUTTON HD, #10-32 X 3/8

For replacement of these items and their component parts, purchase directly from the manufacturer or its distributor(s).

* Use a high strength compound such as Loctite 271 or equivalent, manufactured by Loctite Corp., Newington, Connecticut, 06111. Purchase locally.

** Denotes components of S795 Seal Kit.

† Use a multi-purpose, heavy-duty lubricant paste such as Molykote G-n paste as manufactured by Dow Corning Corporation, Midland, Michigan 48640, or equivalent. Purchase locally.

†† Use a medium strength sealing compound such as Loctite 242 or equivalent, manufactured by Loctite Corp., Newington, Connecticut, 06111. Purchase locally.

††† Use a pliable non-hardening paste type compound such as Permatex Form-A-Gasket #2 or equivalent, manufactured my Permatex Company, Inc. Kansas City, Kansas, 66115. Purchase locally.

NSS – Items not sold separately for repair.

UES Promura
10-12 McWilliam Street
Springvale VIC 3171, Australia
+61 3 9547 5833
sales@uespromura.com.au

Document # S41067 rev. H
© Copyright
BAND-IT-IDEX, Inc. 2010
All rights reserved

UES Promura | +61 3 9547 5833 | sales@uespromura.com.au
10-12 McWilliam Street, Springvale VIC 3171 | uespromura.com.au
Distributor reference copy. Technical / issuer particulars retained; contact links localised.

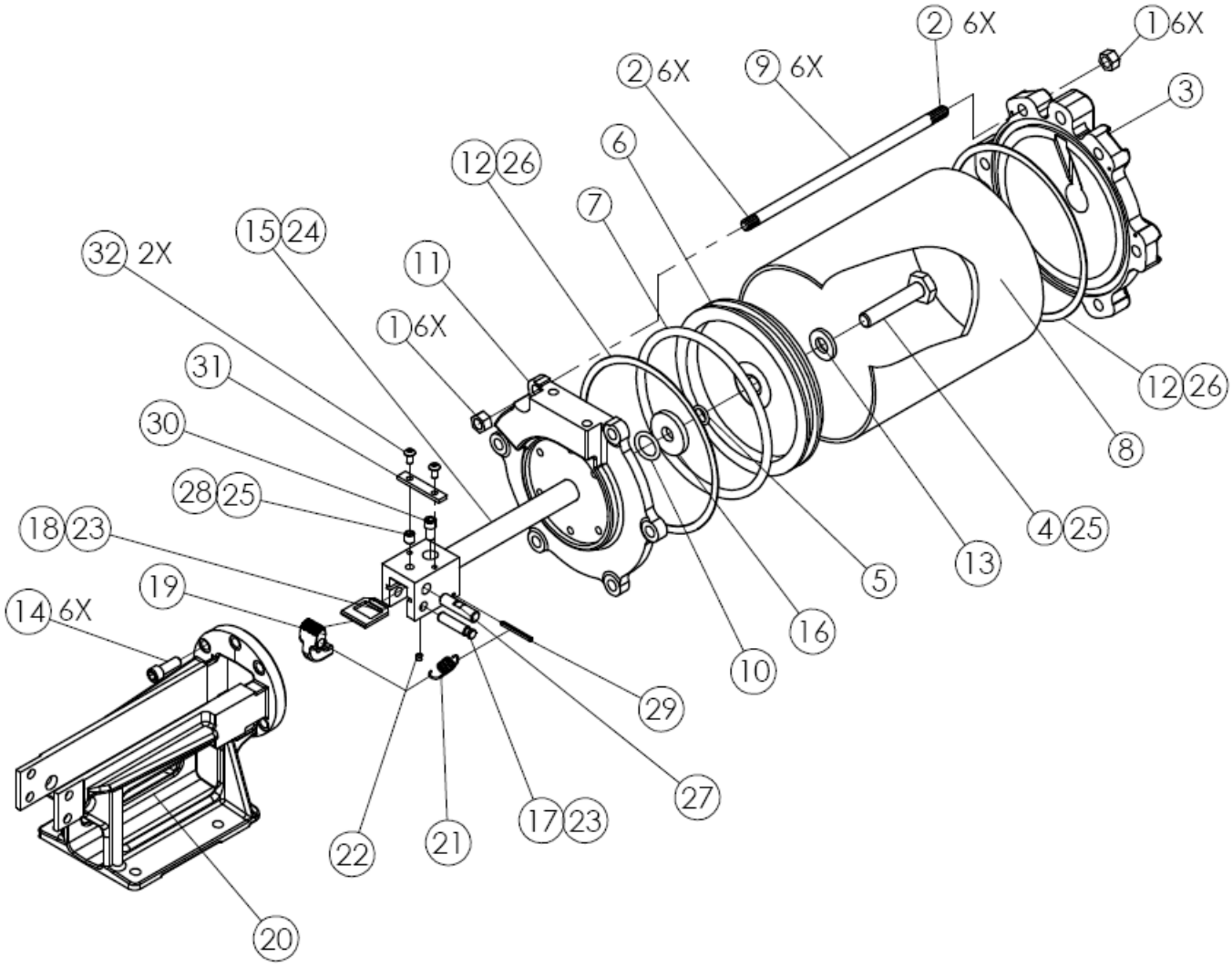

Figure 12 – Pull-Up Cylinder Assembly

Document # S41067 rev. H
© Copyright
BAND-IT-IDEX, Inc. 2010
All rights reserved

Distributor reference copy. Technical / issuer particulars retained; contact links localised.

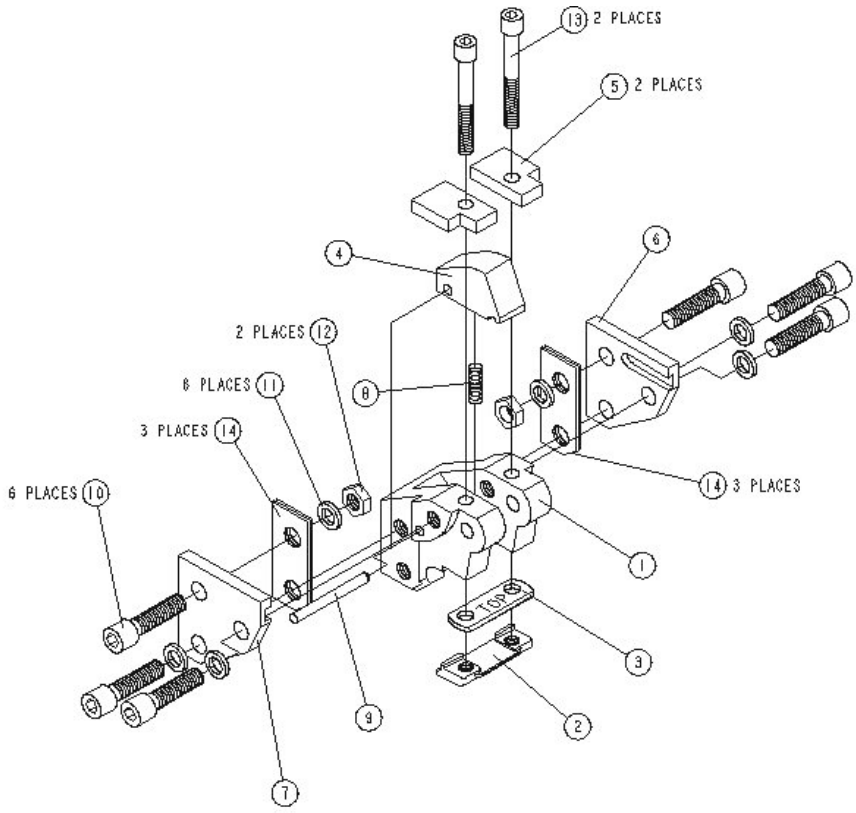

ITEM	PART NO.	QTY	DESCRIPTION
1	S51287	1	HEAD, FINISHED, JR. AIR TOOL
*2	J85785	1	BLADE, CUTTER FINISHED
*3	J85688	1	PLATE, BACKING, FINISHED
4	S25887	1	SHEAR HOOK, FINISHED, JR. AIR TOOL
5	S43987	2	KEY, SUPPORT, FIN. JR. AIR TOOL
6	S43887	1	PLATE, SUPPORT, FIN. RIGHT
7	S43797	1	PLATE, SUPPORT, FIN. LEFT

ITEM	PART NO.	QTY	DESCRIPTION
8	S17287	1	SPRING, COMP, .240 DIA X .688
9	J90887	1	PIN, PIVOT, FINISHED
10	S24987	6	SCREW, CAP, 5/16-18 X 1-1/4
11	J66587	6	WASHER, LOCK, 5/16 ID
12	S39487	2	NUT, HEX JAM, 5/16-18
*13	S44087	2	SCREW, CAP, ¼-28 X 2
14	S44387	---	SHIM, MOUNTING, FINISHED (EST 6 REQ.)

*Order J93099 cutter blade kit. Not available separately.

UES Promura
10-12 McWilliam Street
Springvale VIC 3171, Australia
+61 3 9547 5833
sales@uespromura.com.au

Document # S41067 rev. H
© Copyright
BAND-IT-IDEX, Inc. 2010
All rights reserved

ITEM	PART NO.	QTY	DESCRIPTION
1	G92189	4	NUT, HEX, 5/16-18
3	J66587	4	WASHER, LOCK, 5/16 ID
6	S33987	4	WASHER, FLAT, .341 ID X .69 OD X .06 THICK
7	S35089	1	TOOL ASSEMBLY, AUTOMATIC AIR
8	S38987	1	BOX, S350 SHIPPING ASSEMBLED
9	S39587	4	BOLT, ROUND HEAD, SQ. NECK, 5/16-18

With side panels of item 7 removed, mount baseboard from item 8 onto the base of item 7 using items 1,3,6,9 (see DETAIL A).

Mount side panels onto item 7.

Place item 7 and the baseboard assembly into bottom lid of item 8. Place the sides and dividers of the item 8 around item 7 as shown.

Place foot control assembly of item 7 in right front side pocket with pedal end down and base facing outward. Put rubber hose to the side and front of air tool, between divider and side box.

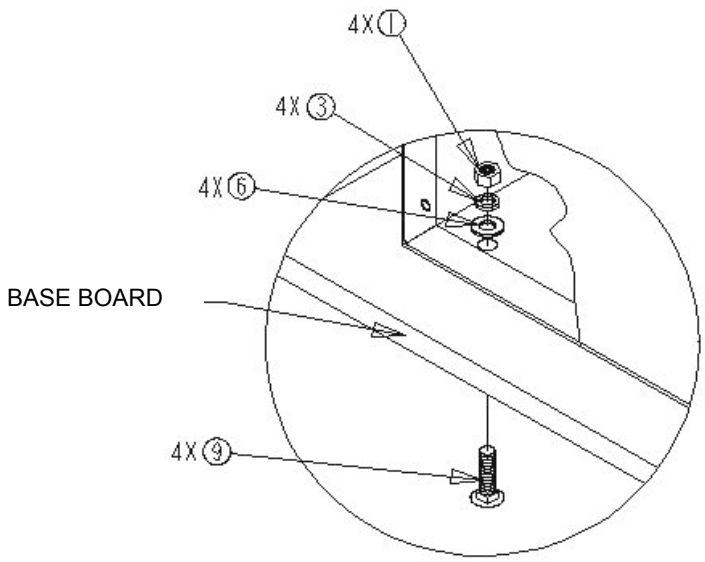

DETAIL A
ENLARGED

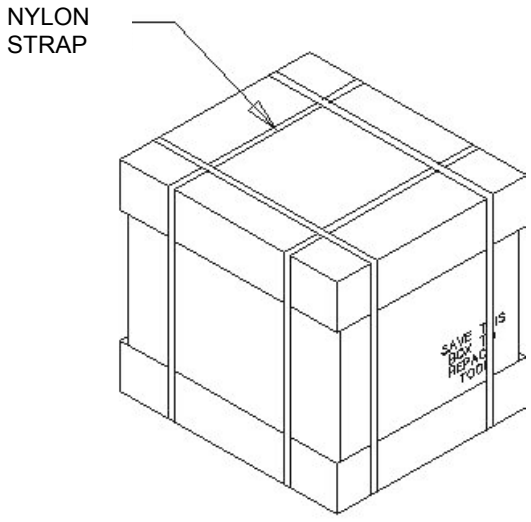

© Copyright
BAND-IT-IDEX, Inc. 2010
All rights reserved

Distributor reference copy. Technical / issuer particulars retained; contact links localised.

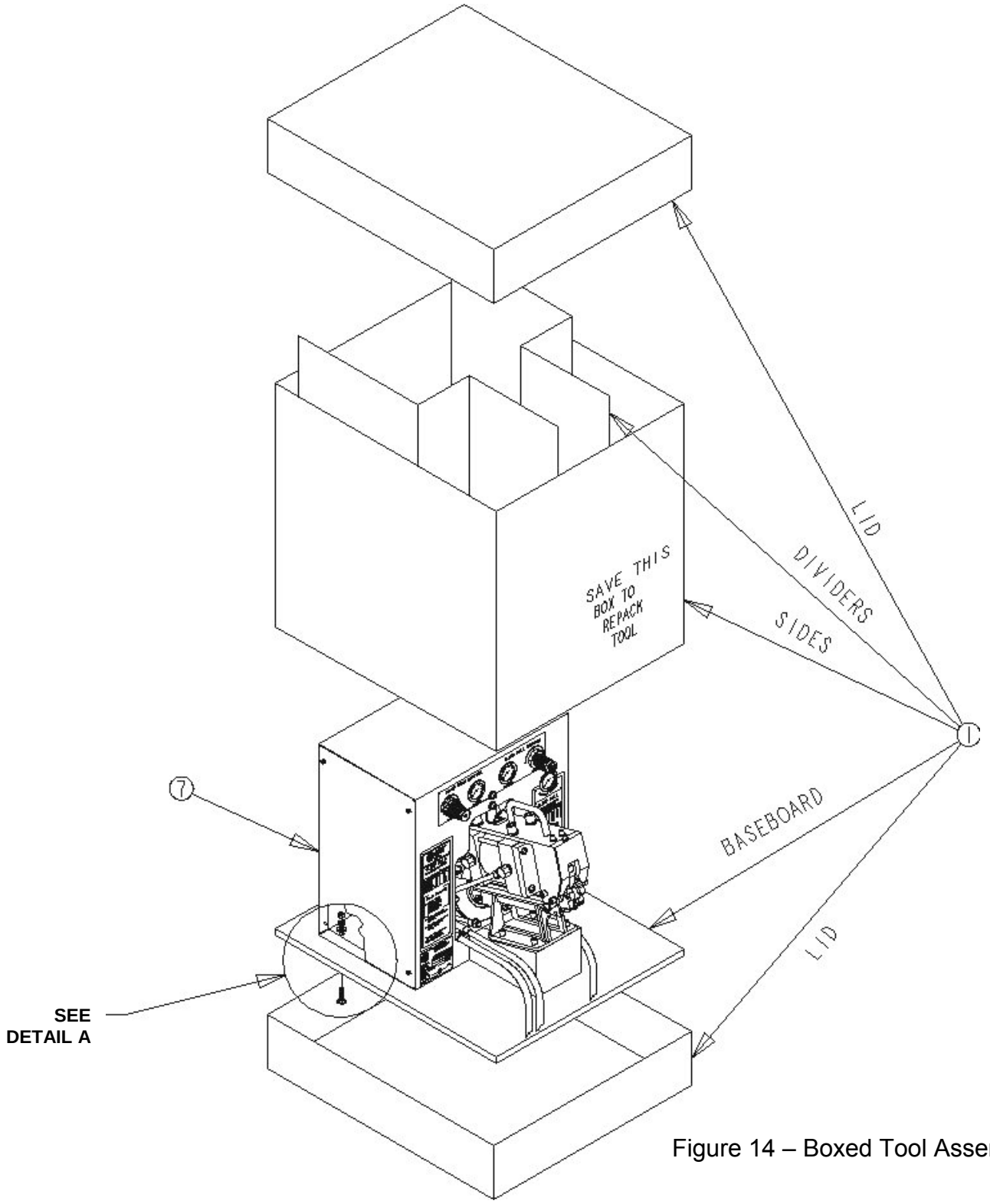

Figure 14 – Boxed Tool Assembly

© Copyright
BAND-IT-IDEX, Inc. 2010
All rights reserved

Distributor reference copy. Technical / issuer particulars retained; contact links localised.